An ACCOUNT *of an* ENTERTAINMENT *given by a* Kaimakam *to the* French *and* Shechs.

Illuſtrated by an Engraving repreſenting an ASSEMBLY *of the* SHECHS.

THE French (ſays M. Denon) made the tour of Sahmatah and Abu-Manah, the confines of the government of the Thebaid, in order to regulate, in concert with the inhabitants, the works of the dykes and canals. The general was received in quality of governor of the province; the kaimakam, or general of the militia, a very wealthy man, had prepared for him on one of his eſtates, in a large court, well watered, where a great number of water-melons and veſſels of water exhaled a coolneſs which in ſome degree abated the intemperance of the ſeaſon: in the evening, he produced a ſupper for the French, for the ſhechs of the province, for the detachment which accompanied the general, and, to conclude, for the innumerable ſervants which were in his ſuite; for, in the eaſt, this is a ſpecies of vermine which breeds and feeds upon you, without your being able to prevent it, or to defend yourſelf from its injuries. If you have one domeſtic, ſays M. Denon, you are almoſt ſure to be ſerved by another, who has never ſo much zeal as when he has no wages, and who never pays you real attention but while he is the ſervant of your ſervant; but ſcarcely has this latter acquired a garment before he muſt have a horſe, and next another officiator, who takes the third rank in your houſehold, and which officiator proceeds like the reſt: this multitude of blood-ſuckers, with which the army was inſenſibly ſwelled, was more chargeable to the country, and more barbarouſly deſtructive to its comfort, than the army itſelf; they robbed with an atrocious audacity proportioned to the rank or power of their maſter, to whom they themſelves became inſolent as ſoon as they were arrived to the ſervice of another ſtill more powerful, under whom they thought to find impunity; their robberies were always at the expence of the huſbandman, the manufacturer, and every other uſeful and reſpectable claſs of the community: it is true that every battle diſperſed them in great numbers, but they returned to pillage, and only changed the diviſion; I have ſeen ſome, who, at the commencement of a campaign, were grooms, maſters, at its end, of three domeſtics, and, by promotions which they impudently made among themſelves, retaining no other branch of ſervitude than that of holding the ſtirrup when their maſters mounted, during which, there was a ſatellite at hand, to hold their pipe, or rather to teſtify to all eyes the dignity to which they were arrived. It muſt be allowed that, little by little, we became accomplices in this corruption, that, in reſpiring the ſame air, we imbibed the ſpirit of the orientals, and that we grew not to know how many attendants we would have.

At this ſupper, the kaimakam, on account of his great age, lay on a bed. He was ſerved by his children. Only his grandſon ate with him; filial reſpect not permitting the ſon to ſit at table with the father, and etiquette being ſilent with reſpect to the grandſon. A carpet was ſpread on the ground, around which ſat all the gueſts. The general and his etat-major were at the upper end. The domeſtics performed their ſervices running among the diſhes. At a little diſtance was the kitchen. The country-houſe of the kaimakam, at which this was held, had the air of being a mere out-yard, with ſhed; but it was perfectly clean, cooled by perpetual waterings, decorated with fine carpets, and animated by a large aſſembly of perſons, having each his ſuite, a magnificence in horſes, in arms, a gra-

vity, a noble decency, a profuſion of ſervitors, inceſſantly bringing ſomething to eat or drink. At firſt ſight, this new ſpecies of luxury ſurprizes; ſoon, it convinces that as well as that of Europe, it has its enjoyments; in the ſequel, it compels ſubmiſſion to its charm: I paſſed two days in its centre, and I found my health conſiderably improved.

I made a deſign of the aſſembly of the ſhechs of the villages, in which were diſcuſſed the intereſts of the government, the welfare of the huſbandman, the prizes to be diſtributed to thoſe who ſhould diſtinguiſh themſelves during the year that was about to begin; for the year in Egypt may be begun at the epoch of the preparation of the canals for the reception and diſtribution of the waters of the inundation: at that time, all is finiſhed for the paſt, and all is about to begin for the future. The aſſembly was held under a large ſycamore*, which afforded the beſt ſhade in the encloſure; and here all the ſhechs of the villages were conſulted on the opening of the canals, and the quota of the expence to be furniſhed by each.

* The Sycamore of Egypt is the *Ficus Sycomorus* of Linneus.

MANNER OF RAISING WATER FROM THE NILE.

THE machine by which the water of the Nile is raiſed during its declenſion is called *naburah*. It is a wheel which raiſes pots or mugs of water that are alſo emptied by its revolution into troughs, by which it is paſſed into the furrows that interſect the lands. They are in general uſe over all Egypt; and are uſually placed under a tree for the convenience of a ſhade for him who governs the cattle employed. In ſome caſes, the driver, inſtead of following the cattle, is ſeated on a ſort of ſtool attached to the bar, and is thus turned about with the machine. Both horſes and oxen are indifferently employed. In this happy climate, the tranquil farmer calculates his firſt harveſt by the height of the inundation, and his ſecond and third by the number of acres which the cattle he poſſeſſes can irrigate.

The mechaniſm of the pot-wheel is ſo ſimple that it is only neceſſary to ſay a word on the carpentry of the principal wheel.

Four circumferences, of about fifteen lines of ſquarage each, form the circle: theſe are ſuſtained by ſmall pieces of wood of the ſame ſquarage, placed perpendicularly to the plane of the wheel, and diſtant from each other the length of a pot: they ſerve at once to ſuſtain the circle and to ſupport the little boards which form the ſeparations of the pots. This aſſemblage is conſolidated by eight croſs-pieces, nailed on the plane of the wheel, and ſometimes bound together at the extremities, which are prolonged beyond the circumference of the wheel, with a cord, or little piece of wood: theſe croſs-pieces ſerve to unite the wheel with its axis: four pieces of wood, nailed obliquely on the croſs-pieces, and fixed into the wheel, increaſe its ſolidity.

This carpentry is covered with boards of the thickneſs of about four lines. It would appear that the Egyptians follow no method in cutting theſe boards, but employ the wood in ſuch a manner as to loſe nothing, without regard to form: they are nailed on the circle, and two rows of laths applied to each face, ſerve to faſten them ſtill more ſecurely.

The mouth of each pot has three ſquare inches of diameter: that which is intended to facilitate the entrance of the fluid is fifteen lines in width, and the thickneſs of the wheel in length.

If a calculation be made of the friction of this machine, it will be found that, an equilibrium ſuppoſed, the power is to the reſiſtance as the produce of the radius of the principal

wheel by the radius of the horizontal wheel is to the produce of the radius of the dentated vertical wheel by the arm of the lever: the machine may therefore be put in motion with a moderate force, by ſufficiently augmenting the radius of the dentated vertical wheel and the arm of the lever, or one only of theſe dimenſions, or likewiſe by diminiſhing the radius of the horizontal wheel; but, in all theſe caſes, there will be loſt in time what is gained in force. The dimenſions of the machine ought to be determined by the conſideration of the force to which it is to be applied. It is probable that the Egyptians, by dint of experience, have arrived at the moſt convenient dimenſions, with regard to the ſtrength of the cattle they employ. Theſe are uſually two buffaloes or two oxen, harneſſed to the fork which forms the extremity of the lever. When the dimenſions of the machine are ſmall, as when the diameter of the great wheel is about twelve feet, a ſingle animal ſuffices; and this is ſometimes either a horſe or a camel: ſometimes, alſo, an aſs is employed to draw in the front, while a man or woman puſh the lever behind.

There are other methods of raiſing water, in which human labour is alone employed; in one of theſe, the water, being drawn up in pails formed of reeds, is emptied into a canal, which communicates with innumerable little furrows, and, after ſupplying theſe, diſcharged into a baſin whence, by a ſimilar operation, it is raiſed four feet higher, in order that it may flow ſtill further: this machine is wholly ſimilar to the ſwing-wells ſeen in the villages of Europe: the labour is performed to meaſure, the labourers either ſinging, or counting numbers, or reciting the praiſes of God, or the virtues of Mohammed: the proprietor ſits by, with his pipe, reckoning his harveſt by the inches of water: at the ſame water, the women come to to fill their buff-ſkin bottles, a taſk which forms their principal occupation; and the ablutions are performed, while the moſlem turns his face to Mekka, which contains the tomb of the prophet.

By a third method, which alſo raiſes the water, the labourers dip the pail in ſtooping, raiſe it in falling back, and empty it by looſening one of the cords: here, the ſame meaſure is preſerved as in the other.

ON PAINTING.

By Mr. Edward Dayes, Painter.

ESSAY VIII.—*ON MANNER.*

Peculiar marks I hold to be generally, if not always, defects; however difficult it may be wholly to eſcape them. Sir Joshua Reynolds.

THE word *manner* may be applied to colour, light and ſhade, and penciling. It is expreſſive of certain peculiar marks that invariably characteriſe the works of each individual, as in ſome a blueneſs in the colouring prevails, in others a gray or yellow, while others are diſtinguiſhed by a harſhneſs in the ſhadows; in one the penciling is round, in another ſquare or forked. So far is a new manner from being a mark of genius, as ſome aſſert, that, could perfection in painting ever be attained, it would be unaccompanied by any peculiarity whatever.

In that part of our education which is to be obtained by copying, we ought to be particularly careful that the works we copy, or the maſter we imitate, have a manner the pureſt and the leaſt vicious poſſible; for we may reſt aſſured, ſingularity, which in ſome is glaringly abſurd, will be the firſt portion we ſhall inherit.

He who forms to himſelf a model

in a maſter will be always inferior to the archetype: the heads of all the great ſchools have been ſuperior to their imitators. Nature riſes in the ſame degree over the ſervile and baſe. M. Angelo was ſuperior to his diſciples, and that in proportion to their dependent habit of thinking. The ſame cauſe placed Raphael, Titian, the Caracci, &c. at the head of certain claſſes of artiſts, many of whom have followed their maſters limpingly and awkwardly. The ſame baneful deſire of imitation is equally detrimental to poets; for the arts cannot be called liberal in the hands of thoſe who want ſpirit to think for themſelves. Not to acknowledge the favours we receive would be illiberal, but to ſink under them into a ſtate of ſlavery is baſe. The wiſdom of the world may inform, but we muſt improve from ourſelves; for precept will do but little if the mind is not ſuſceptible of it; the ſeed muſt be ſuited to the ſoil. The mind, like a fine ſpring of water, will become more productive and clear the more it is uſed.

Peculiarity is what chiefly characterizes the different maſters. We ſay, for inſtance, the manner of Raphael is dry and hard, thereby indicating the too violent diſplay of outline, the deciſions and abrupt diviſions in the ſhadows, with the parts not ſufficiently loſt in their grounds. That of Spagniolet is forcible, with much red in the fleſh; while in that of Rembrandt we expect little light, with a glow of colour, that may too often be called rotton-ripe. We may further obſerve the dark manner of Guercino and the ſilver of Guido, with many others not neceſſary to mention. What are thoſe differences in the various maſters, but ſo many ſingularities that characterize and diſtinguiſh the individual?

As perfection cannot be attained, every artiſt, of neceſſity, will have a manner; but in proportion as he ſucceeds in approaching perfection will his manner become the more pure. This he can only hope to attain by an extenſive inquiry, that is, by not ſlaviſhly tying himſelf down to the imitation of an individual. He is bound to ſhow in his works that he has opinions of his own, and that he dares to think for himſelf.

Raphael's firſt manner was like that of his maſter Perugino; but this he ſoon quitted for a ſweeter mode of colour, which he caught from Da Vinci and Bartolomeo, and for a more noble and elevated ſtyle, which he acquired from M. Angelo. Julio Romano imbibed much of the fire of his maſter, as did Roſſo and Prematicio of theirs. The Caracci adopted a moſt liberal manner of imitation, founded on a combination of the excellences of all the great ſchools, and ultimately produced one entirely new. Domenichino, Guido, Guercino, and Schidone, exhibit in their works but ſlight traces of the ſchool they were formed in. Van Dyck is perfectly original. Our countryman Reynolds is an example of this liberal manner of imitation; we ſee in his works the grace of Corregio and Parmegiano combined with the beauty and richneſs of Venetian colouring, accompanied with the *chiaro ſcuro* of the Flemiſh and Dutch. Le Sueur's firſt manner reſembled his maſter Vouet, which he ſoon quitted, and made himſelf ſuperior in every part of the art. Le Brun was influenced by the ſame ſpirit of independence, and left his maſter far behind.

Of thoſe who have been deſtitute of the pride of independence, and have fallen into a narrow, confined, and illiberal kind of imitation, we will point out a few. Guido was imitated by Sirani, Pouſſin by Verdier, Paul Veroneſe by his brothers, and Jacomo Baſſan by his ſons. Rubens was imitated by Jacques Jordans, who has increaſed the exceſſes of his maſter without adding one perfection of his own. Rembrandt was followed ſervilely by Bramer, Eckhout, De Gelder, &c. We might enumerate many others, which muſt occur to every one's recollection, whoſe works paſs with the ignorant for thoſe of their maſters. Perhaps this difference in

the works of artiſts may ariſe from the external objects and their images painted in the eye of ſome, not agreeing; which may alſo account for the variation we obſerve between the bulk or altitude of bodies and their repreſentations by various artiſts. This peculiar habit of ſeeing may conſtitute what we call *manner*.

It is certain too much copying, or too great a devotion to the works of ſome favourite maſter, brings on a habit of ſeeing even nature with his imperfections. Hence it is, that what is termed the ſchools have in the end proved the ruin of art; not becauſe they were bad, but becauſe weak men have been content with nature at ſecond-hand; ſome author calls ſuch people not nature's ſons, but her grandſons.

Before we quit this part of our eſſay we will juſt touch on the manner of penciling, alſo called handling. The uſe of the pencil is diſtinguiſhed into the ſmooth or mellow, and the expeditious or bold. The application of thoſe manners muſt, in a great degree, depend on the ſize of the picture to be painted, alſo its ſituation and ſubject. As far as ſubject is concerned, the former method beſt applies to objects in themſelves beautiful; as elegant female figures, young and ſleek animals, paſtoral, and all objects intended to delight. The latter manner will beſt aſſociate with aged, broken, and irregular objects, and ſuch ſcenes as are intended to excite terrible emotions. The bold pencil of Rubens is highly admirable, and is a great beauty in his pictures; while the pencil of Van Dyck is more ſoft and mellow. Claude had a ſmooth pencil ſuiting his choice of ſubject; on the contrary, Salvator Roſa is bold, and well impaſted with colour. The pencil of Titian is a fine example for the heroic in landſcape, or what may be termed the hiſtorical ſtyle, and which, as mentioned in our firſt eſſay, derives its name from the dignity of the objects of which the picture is compoſed. Thoſe are miſtaken who imagine it derives its character from ſlightneſs and indeciſion, and who dignify their own crude and undiſtinguiſhable maſſes with that noble appellation. The pencil of Titian is firm, bold, and at the ſame time, deciſive, and, in the higher ſtyle of landſcape, may be offered as an example worthy of our attention. We ſhall find numberleſs examples in the Dutch ſchool to direct our hand in the paſtoral; and the pencil of young Teniers is, perhaps, the fineſt in that part of the art. The pencil is not a mere vehicle for laying on the colour, but its motion muſt expreſs the character of the various objects it may be employed on. As in landſcape the foliage of trees, incruſting of the bark; on cattle, in repreſenting hair and wool; the character and folds of drapery, the thinneſs of flowers, &c.

As well as the manual practice, painting requires. 1. A boldneſs of hand in the dead-colouring: 2. In the ſecond colouring, more circumſpection and labour: and, 3. Thorough patience and attention in the retouching and finiſhing of the picture. Theſe qualities can no more be ſeparated than Venus and the Graces.

He who wiſhes to inſure himſelf a good manner of penciling ſhould avoid copying ſuch pictures as are imperfect in that reſpect; for, if we begin with a ſlovenly or bad one, every ſtep will plunge us deeper in error. But all attempts at painting will be vain if we do not poſſeſs the power to determine the form at once, which can only be acquired through a previous practice in drawing; for on this the clearneſs as well as the firmneſs of the penciling depends.

There are two methods of preparing our picture: one is, to draw in the objects with their ground colour, carefully lying in the ſhadows, dead-colouring the lights ſolid, and *preſerving the ſhadows tranſparent throughout the work*; in the ſecond ſtage, to correct the forms, and add to the darks where wanted; and, thirdly, after oiling out

the parts, bringing the whole into harmony by glazing, ſcumbling, and finiſhing with the extreme lights and darks. This direction is general; for, after the lights and darks are added, parts may require to be kept down, enriched, &c. as practice muſt direct. The ſecond method is to dead-colour *ſolidly throughout*, and to finiſh the ſhadows by glazing. The latter method admits of greater changes being made in the work during its progreſs than the former.

A Sketch of the GEOGRAPHY *of* COCHIN CHINA; *with ſome Particulars relative to the* MANNERS, CUSTOMS, *and* HISTORY *of the* INHABITANTS.

COCHIN China, called by the natives Anam, extends from about the 20th degree of north latitude to Pulo Condore, which lies in 8° 40′. It is bounded by the kingdom of Tonquin on the north, from which it is ſeparated by the river Sungen; by the kingdom of Laos, and by a range of mountains, which divides it from Cambodia, on the weſt; and by that part of the Eaſtern Ocean generally called the China Sea, on the ſouth and eaſt.

The kingdom is divided into twelve provinces, all lying upon the ſea-coaſt, and ſucceeding each other from north to ſouth in the following order:

Ding-oie, Cong-bing, Ding cat, Hue, (or the court) in the poſſeſſion of the Tonquineſe. Cham, Cong-nai, Quinion, in the poſſeſſion of Ignaack, Phu-yen, Bing-khang, Nah-tong, Bing-thoam, (or Champa) dubious whether ſubdued by Ignaack, or ſtill in the poſſeſſion of the king. Donai, in the poſſeſſion of the king.

The breadth of the country bears no proportion to its length. Few of the provinces extend further than a degree from eaſt to weſt, ſome leſs than twenty miles: Donai, which is properly a province of Cambodia, is much larger.

The whole country is interſected by rivers, which, although not large enough to admit of veſſels of great burden, yet are exceedingly well calculated for promoting inland commerce.

The climate is healthy, the violent heat of the ſummer months being tempered by regular breezes from the ſea. September, October, and November, are the ſeaſon of the rains; the low lands are then ſuddenly overflowed by immenſe torrents of water which fall from the mountains. The inundations happen generally once a fortnight, and laſt for three or four days. In December, January, and February, there are frequently rains brought by cold northerly winds, which diſtinguiſh this country with a winter different from any other in the eaſt. The inundations have the ſame effect here as the overflowings of the Nile in Egypt, and render the country one of the moſt fruitful in the world. In many parts the lands produces three crops of grain in the year. All the fruits of India are found here in the greateſt perfection, with many of thoſe of China.

No country in the eaſt produces richer or a greater variety of articles proper for carrying on an advantageous commerce; cinnamon, pepper, cardemoms, ſilk, cotton, ſugar, Agula wood, Japan wood, ivory, &c. Gold is taken almoſt pure from the mines; and, before the troubles, great quantities were brought from the hills in duſt, and bartered by the rude inhabitants of them for rice, cloths, and iron. It was from them alſo the Agula and Calambae woods were procured, with quantities of wax, honey, and ivory.

The animals of Cochin China are bullocks, goats, ſwine, buffaloes, elephants, camels, and horſes. In the woods are found the wild boar, tiger, and rhinoceros, with plenty of deer; the poultry is excellent, and the fiſh

caught on the coaſt abundant and delicious. The fleſh of the elephant is accounted a great dainty by the Cochin Chineſe. The breeding of bullocks is little attended to; their fleſh is not eſteemed as food, and they are made no uſe of in tilling the land, which is performed by buffaloes. They are totally unacquainted with the art of milking their cattle.

The aborigines of Cochin China are called Moys, and are the people which inhabit the chain of mountains which ſeparate it from Cambodia. To theſe ſtrong holds they were driven when the preſent poſſeſſors invaded the country. They are a ſavage race of people, very black, and reſemble in their features the Caffrees.

It was about the year 1280, of the Chriſtian era, that the firſt Tartar prince became poſſeſſed of the throne of China. This revolution afforded an opportunity to the weſtern provinces to throw off their dependence; and they were formed into a kingdom, under a prince whoſe deſcendant now reigns in Tonquin, and is called Knaw-Whang. About the beginning of the fifteenth century a large body of people from theſe provinces, being diſaffected to the government, joined under a leader of abilities; they ſoon became maſters of the coaſt of Cochin China as far as Cape Aurilla, which lies in latitude 12° 30′ north. The Moys, the original inhabitants, retired to the hills bordering their country to the weſtward; where they have ever ſince remained. The emigrants, under their conductor, founded the kingdom of Cochin China. The continual wars they were engaged in with the Tonquineſe, induced them to build a wall on the ſouthern extremity of the province of Ding-noi, to prevent their irruptions. Every communication by ſea was ſtrictly forbidden. In the year 1764, the country of Cochin China was in a flouriſhing condition, and governed by a prince of abilities: ſoon after his ſon ſucceeded to the throne, and anarchy and confuſion enſued.

The Cochin Chineſe bear evident marks of their being derived from the ſame ſtock as the Chineſe. They reſemble them in their features, and moſt of their manners and cuſtoms. Their religion is the ſame: their oral language, though different, ſeems formed upon the ſame principles; and they uſe the ſame characters in writing. They are a courteous, affable, inoffenſive race, rather inclined to indolence. The ladies are by far the moſt active ſex; they uſually do all the buſineſs, while their lazy lords ſit upon their haunches, ſmoking, chewing beetle, or ſipping tea. Contrary to the cuſtom of China, the ladies are not ſhut up; and, if unmarried, a temporary connection with ſtrangers who arrive in the country is deemed no diſhonour. Merchants often employ them as their factors and brokers, and, it is ſaid, the firmeſt reliance may be placed on their fidelity.

The habit of the men and women is cut after the ſame faſhion. It is a looſe robe, buttoning with a ſmall robe round the neck, and folding over the breaſt like a banyan gown, with large long ſleeves which cover the hands. People of rank, and eſpecially the ladies, wear ſeveral of theſe gowns one over the other; the undermoſt one reaches to the ground, the ſucceeding ones are each ſhorter than the other, ſo that the diſplay of the different colours makes a gaudy appearance as they walk along.

The ſituation of Cochin China is excellently well adapted to commerce. Its vicinity to China, Tonquin, Japan, Cambodia, Siam, the Malay coaſt, the Philippines, Borneo, the Moluccas, &c. renders the intercourſe with all theſe countries ſhort and eaſy. The commodious harbours formed on the coaſt, particularly that of Turon, afford a ſafe retreat for ſhips of any burden during the moſt tempeſtuous ſeaſons of the year.

THE GLEANER.

NUMBER XLVI.

'None can tell where the ſhoe pinches, but thoſe who wear it.'

MR. GLEANER,

THOUGH I have often been told that maxims are very vulgar, and are only applied to by the unlettered part of mankind, yet there is a conciſeneſs in them that happens to pleaſe my fancy, as they expreſs, in few words, the ſenſations of the mind. Though I do not mean to apply to you, ſir, as I would to a ſhoemaker, or imagine that you have laſts that would make every ſhoe become eaſy to the feet, yet I cannot help believing you will agree with me in thinking, that to different ſtations there are different paths which ought to be trod. But unfortunately, Mr. Gleaner, we are apt to diverge from that direction, which reaſon and propriety tells us we ought to take, and inſtead of purſuing the path which might conduct us to happineſs, by ſome retrograde movement we involve ourſelves in diſtreſs.

You, ſir, as a man of ſenſe, muſt perceive the juſtneſs of theſe obſervations, though I grieve to ſay they make not the leaſt impreſſion upon my wife, and it is the little reſpect ſhe pays to my opinions that induced me to apply to you for advice. You muſt know, Mr. Gleaner, I am what the world calls a gentleman farmer, though I have about three hundred acres, beſide my own eſtate, and I can ſafely ſay, that until the laſt four years, no man in the world ever led a happier life. But the devil take doctors, and nervous diſorders; indeed, I have reaſon to ſay: 'tis an ill wind, I have heard, that does not blow good to ſome one;' but it was an ill wind, that blew Mrs. Tapeworm our way.

My wife's ſiſter you muſt know is married to a haberdaſher in Cornhill, and two peas in point of perſon were never more alike; but in diſpoſition, they are as oppoſite as light and darkneſs; in ſhort, the one was a very good, but the other muſt always have been, a bad wife. In an evil hour, however, the doctors recommended change of air for her nervous diſorder, and accordingly ſhe wrote to my poor dear Letty, to ſay ſhe would ſpend a month at our houſe.—As we lived at a great diſtance from London, my wife had not ſeen her ſiſter for a matter of ſixteen or ſeventeen years, therefore, you may ſuppoſe, ſhe naturally felt happy at the thought of embracing a perſon to whom ſhe was ſo nearly allied.—At the time our ſiſter Sally married Mr. Tapeworm, he was merely rider to the ſhop which now was his own; therefore you may think we were not a little ſurpriſed to ſee her come in her own carriage, attended by a footman and lady's maid. We had merely made preparation for the reception of Mrs. Tapeworm, never ſuppoſing our ſervant could not do what ſhe required; but my wife eaſily put up with the inconvenience of her ſiſter's domeſtics, from feeling gratified by her living in ſo faſhionable a ſtyle.

We were juſt ſitting down to dinner when our elegant gueſt made her appearance, and of courſe I left the table to hand her from the chaiſe: 'my dear Sally,' ſaid I, but proceeded no further, for ſhe ſtopped me by exclaiming, 'Never call me by that vulgar epithet; Selena, for the future, my dear brother, if you pleaſe!' The cordiality with which I was going to welcome my viſitor was ſuddenly chilled by this unexpected reproof, and I conducted her from the carriage without concluding my civility, or even ſaying, I was happy to ſee her under my roof.

Inſtead of being able to trace in my

ſiſter in-law any of that openneſs of character, which when ſhe left the country I ſo highly admired, I could only diſcover a lump of affectation, by which nature and feeling were ſhamefully diſgraced. From labouring under, what ſhe called a nervous diſorder, ſhe is incapable of fulfilling a ſingle duty of life; but this would be a matter of mighty little conſequence, if ſhe had not communicated the complaint to my wife. In ſhort, ſir, Mrs. Tapeworm had not been a fortnight in the country, before Sally informed me the care of her family was attended with ſo much fatigue, that, unleſs I conſented to her engaging a kind of houſekeeper, ſhe was convinced ſhe ſhould not live many weeks.—I loved my poor girl with ſuch ardent affection, that the very thought of loſing her was torture to my heart; and I knew, if ſhe was ill, it was abſolutely neceſſary to have a truſty perſon to conduct the domeſtic concerns. A houſekeeper therefore was engaged, and my wife appeared gratified by the readineſs with which I complied with her deſires; but ſhe ſoon found that riding in an open carriage was extremely prejudicial to the ſtate of her health.

As moſt things vary after a certain period, I concluded my wife's conſtitution had undergone a change, and as I had plenty of horſes, I thought it my duty to do every thing in my power to promote her health. I ſold my gig, and bought a chariot, then taught a nice little plow-boy to drive; but this would not do, I muſt keep a regular coachman, for the boy terrified her out of her life. Though I began to ſuſpect that Letty was a pupil of Selena's, yet, as all theſe indulgences were required under the pretence of ill health, I could not bear the idea of thwarting her inclinations, though I found wants multiply in proportion to the readineſs with which I complied.

In ſhort, Mr. Gleaner, from the time of my ſiſter-in-law's viſit, my wife's diſpoſition is entirely changed, and if I happen to diſapprove either her wiſhes or inclinations, it immediately brings on a nervous complaint. Theſe nervous diſorders, ſir, are not only dreadful to the parties afflicted, but their baneful influence extends to thoſe who are enjoying the higheſt health, as there are few fortunes can ſtand the preſcriptions adviſed for them, for they abſolutely ſwallow up a mine of wealth.—Variety of ſcene —Public places—Sea-bathing—and Bath waters, are ſucceſſively preſcribed, without any attention being paid to the fortune of the parties ſo affected, or the doctors caring whether the huſband is not ruined by the increaſing complaints of the wife. Now, ſir, to revert to the ſubject, with which I began this letter; namely, that 'No one knows where the ſhoe pinches, but thoſe by whom it is worn;' and I aſſure you my feet are ſo pinched by this faſhionable mania, that if I had any concerns with ſtock-jobbing, I ſhould become a lame duck.

As I know your Magazine has a very extenſive circulation, and that on every ſubject you are capable of giving advice, I truſt you will have the goodneſs to offer a few hints to theſe ſons of Æſculapius, who have ſo unfortunately diſcovered nervous complaints. Surely, ſir, there ought to be a difference in the regimen preſcribed to the wife of a lord, or a commoner! and a ſtill greater between that of the commoner, and the wife of a man in trade! But inſtead of which, all muſt indiſcriminately follow the ſame preſcription, from the wife of the firſt lord of the admiralty, to that of your petitioner Samuel Slade.

Now, ſir, if amuſement is recommended as a cure for this diſorder, what amuſement ought to be greater to a woman than looking after her family affairs? Though now and then taking a cup of tea, or playing a game of cards with a neighbour, is what no huſband would think he had a right to object.—If ſea bathing is proper, why let them get a tub of

water, and put in ſix or eight good handfuls of ſalt, and I have not a doubt but it would anſwer the ſame purpoſe as driving a matter of a hundred miles to the ſea.—Then there are ſome of your faſhionable ſprings, that the water is ſo filthy, you might as well drink a compound of damaged eggs; and perhaps if they were properly mixed with water, and refined with a little iſinglaſs, they might produce a wonderful effect upon the health.—When Bath was preſcribed for my Letty's diſorder, I told the doctor I could juſt as well warm the water at home, but my wife informed me, it was not merely the going into the water, but the exhilaration the ſpirits would feel by the agreeable company ſhe ſhould meet there.—I replied, that this might be managed without her going ſuch a journey, as I have a famous large ciſtern, at which the cattle drink; and this, (though it would give a good deal of trouble) I would have filled with hot water, and then ſhe might invite her neighbours to go in and walk about. Though I really thought this a very ſenſible contrivance, and I am ſure it was one that would have ſaved ſome hundreds in my purſe; yet both Letty and the doctor ridiculed it ſo completely, that I was glad to be ſilent, and let them have their way.

From the very time that madam Selina made us the viſit, my wife has never been free from nervous complaints; and though I have had five or ſix doctors to her, they have all agreed in adviſing a change of ſcene and place.—Thus you ſee, ſir, inſtead of enjoying Letty's company, ſhe is driving about the country after ſhows and ſights; and though at the laſt fair I offered to buy a puppet-ſhow for her, yet ſhe ſaid I only made the offer to ridicule her complaints. I aſſure you, ſir, I have no reaſon to ridicule them; for I would rather ſee her laid up with a good fit of the gout, as I might hope that old time would cure that diſorder; but there is no chance of curing a diſeaſe, when the phyſicians preſcribe driving about.—I intreat you then, ſir, to adviſe theſe enemies to domeſtic happineſs to change the plan of their preſcriptions, and confine their patients to their home; for my poor Letty never had a nervous diſorder, until ſhe caught the infection from Tapeworm's wife.—In ſhort, I think the phyſicians ought to treat it as epidemical, and debar their patients from all intercourſe with ſociety, as if they were infected with the plague; for no one knows what will be the conſequence if this dreadful diſorder is ſuffered to rage!—It not only proves deſtructive to individual happineſs, but it is detrimental to the general intereſts of mankind; for the mode of cure preſcribed muſt ruin a man of ſmall fortune, yet he muſt either become a bankrupt, or run the hazard of loſing his wife!—For different ſituations, ſir, different methods ought to be adopted, and though a man of large fortune may allow his wife to drive half over the world, yet ſurely the wife of a farmer might be cured by having her journeys limited within twenty miles of her own home.

At any rate, Mr. Gleaner, I truſt you will have the goodneſs to reflect upon my ſituation, and if you can point out any remedy, indulge me with your advice, for I certainly am travelling the high road to ruin, by following the preſcriptions which are ordered for the nervous complaints of my wife. I am, ſir, yours,

SAMUEL SLADE.

TIOHANG: A CHINESE TALE.

TIOHANG, the ſon of Tieking, a man of letters at Taming, a city in the province of Pekin, had a quick underſtanding, and a noble and generous ſoul. This young man being ſent to Pekin, to perfect himſelf in the literature of his country, in a few years obtained the degree of ſiou-tſai,

or bachelor of arts. On returning home, adorned with his blue gown, which diſtinguiſh ſiou-tſaïs, he was obliged to ſtop at a town, about half a day's journey from Taming. He aſked for a night's lodging of a good woman whom he happened to meet; and, according to the ancient cuſtom of the Chineſe, was received with all the expreſſions of kindneſs, in the moſt hoſpitable manner. While engaged in converſation with her, he perceived that at times ſhe ſighed, and even dropped a ſilent tear. This excited his ſenſibility, and he ventured to aſk the cauſe of her grief: giving a deep ſigh, ſhe anſwered, that ſhe had great reaſon to fear her grief would thereby be encreaſed.—My ſon's affliction, incapable of relief, the ſtate of dejection and langour he is in, and the conſequences which I dread, fill my ſoul with terror and anguiſh. He ardently loved the daughter of an inhabitant of Taming, whoſe prudence and virtue equalled her beauty, and was beloved by her with no leſs tenderneſs. He aſked her in marriage of her parents, and having obtained their conſent, the day of their marriage approached; when ſuddenly the firſt mandarin, the barbarous Takuai, cauſed the damſel to be carried off; and we have not been able to diſcover the place where he keeps her concealed. My ſon, on learning the ſorrowful event, ran without loſs of time to Taming, and uſed every endeavour to recover his betrothed bride; but all in vain. My poor ſon lies plunged in a moſt profound dejection, overwhelmed by an anguiſh that admits of no alleviation; tears and grief are his only ſupport. In vain have I ſought to adminiſter conſolation to his afflicted ſoul, by every means in my power; all that I have tried has only ſerved to ſharpen his pain. It is now ſix days that a ſlow fever has aſſailed him, he is waſting away in conſequence of its effects; alas! I fear that ſhortly I ſhall ſee him reduced to his laſt, and ſhall become childleſs. A flood of tears ſucceeded theſe words.

The youthful Tiohang was affected at the recital, and animated by an active courage, ſaid—Be of good cheer, and do not deſpair: the evil is not yet without a remedy. Where is your ſon? May I be allowed to pay him a viſit? The good woman took him to the room where he was. He ſaw ſtretched on a bed, a youth whoſe chin was lightly ſhaded with the firſt down. His features indicated a comelineſs not frequently met with in that climate: but meagre and waſted, grief and death were depicted on his countenance. His languid eyes, filled with tears, rolled with difficulty; and cloſing again, ſeemed to ſhun the light. Frequent ſobs, interrupted by ardent ſighs, gave a painful motion to his breaſt, and a feeble voice was heard from time to time repeat—Ah, Sohepin! too amiable and too dear Sohepin. Tiohang, taking him kindly by the hand, ſaid to him—Do not yield to grief and deſpair; the object of your love is not irrecoverably gone: the magnanimous monarch heaven choſe to govern our empire, ſheds the rays of his juſtice over all its parts. Have you not yet made your cries penetrate to his ears?—Ah! how can I make my tears flow at the foot of his inacceſſible throne?—Then, ſaid Tiohang, I will open the way for you. I have already had ſeveral audiences from the prime mandarin; he knows me, I will preſent you to him, and you will find in him a protector and a ſupport in your misfortune. At this ray of new hope, Sahikou darted a look, in which joy was perceived to gleam through the clouds of grief that covered his countenance—Ah! cried he, may this not prove a vain hope! my death would be the inevitable conſequence.—No; take courage, replied Tiohang, to-morrow, at break of day, I will haſten to Taming, to ſee my relations, from whom I have been abſent ſeveral years. They will gladly conſent, that for ſo juſt a cauſe I may employ every means in my power. I ſhall immediately return, and will conduct you to the metropolis. Tio-

hang, full of ſenſibility, departed at dawn for his country; animated by a ſweet complacency at having found ſo favorable an opportunity of doing a generous action, and full of hope that his virtuous reſolution would be applauded by his parents. On his arrival at home, a ſcene preſented itſelf to his eyes which filled him with aſtoniſhment and terror. The houſe uſed continually to be filled with people who had occaſion to ſee his father on their affairs; but now it was quite deſerted. He went through the hall, and at laſt met an old ſervant, whom he queſtioned reſpecting his father; tears were his only anſwer. Agitated by a thouſand fears, he haſtened to preſent himſelf to his mother, whom he found overwhelmed with conſternation, and drowned in tears. Ah! cried he, flying to her arms, my father exiſts no longer then? His mother embracing him, and raiſing him with difficulty, ſaid—My ſon, he lives, yes, he ſtill lives; but overwhelmed with diſgrace and miſery. An unfortunate old man, whom Taknai, that barbarian, has deprived of an only daughter, came to your father to implore his aſſiſtance for the recovery of her. Your father has dared to employ himſelf with activity in his defence. The cruel mandarin, irritated againſt him, has tyrannically ordered him to be arreſted; and he has been groaning in irons theſe ſeveral days.—Ah, the monſter! cried Tiohang, tranſported with indignation. I did not expect to hear ſuch exceſs of villainy. But he ſhall not triumph long, no! Let him tremble at the revenge that hangs over his head. Having ſaid theſe words, he tore himſelf from his mother's arms, and flew to the priſon.

On gaining admittance, he found at the bottom of a tower, where a faint ray of light penetrated with difficulty, the reſpectable Tieking lying on the damp ground, loaded with a double weight of chains, but who by his tranquil countenance, ſhowed evidently the ſerenity of a virtuous mind, oppreſſed but not overcome by miſfortune. At this ſight, the youthful Tiohang gave a ſhriek, and fell on his father's neck. He, with a tranquil air, ſaid—My ſon, you ſee in me an inſtance of the injuſtice of man. But, however, virtue is a ſweet comfort in theſe trying ſituations. Surrounded by the gloom of this horrid dungeon, I am more contented than the wicked tyrant who oppreſſes me is in the pomp of his ſplendid apartments. I have tried to defend the innocent and diſtreſſed againſt injuſtice and deſpotiſm. Should even death be the conſequence, the thought of having done a good action, will be ſweet to me.—Ah! that villain deſerves a thouſand deaths, cried Tiohang, furiouſly. This hand, yes, this very hand, will revenge your wrongs.—No, my ſon; beware of bringing diſhonour upon yourſelf and your father by a raſh act. My innocence will be known, fear not: heaven is juſt.—Well then, replied Tiohang, it ſhall be my taſk to make your innocence and virtue known: heaven is juſt, and will know how to favour me. Tell me where the unfortunate old man, whom you ſought to defend in vain, lives. He then imparts to him his deſign, diſcovers the reſolution he had taken with Sahikou. His father embracing him tenderly, ſaid—Well, I now know you for my ſon. Go: heaven will favour your piety. Full of ardour and hope, Tiohang ran to find the father of the ſtolen damſel, and ſhaking him from his lethargy, he perſuaded him to go to Pekin with him. He then went to comfort his mother; and in the evening he arrived, with the old man, at the houſe of Sahikou. The next morning they all three departed together; and in a few days arrived at Pekin. There the ſkilful and active youth, with indefatigable ardour ſucceeded in obtaining an audience for himſelf and his two companions with the grand mandarin. He repreſented to him, with all the force of his eloquence, the oppreſſion under which

groaned the unhappy Sohepin, her aged father, and her afflicted lover, who was in deſpair for her loſs; and when he came to deſcribe the ſufferings his father endured, for having defended ſo juſt a cauſe, he animated his diſcourſe with ſuch fire, and tender pathos, that the grand mandarin could not refrain from tears.

The worthy prime miniſter did not delay a moment to acquaint the emperor with all the particulars of this caſe. The monarch was ſtruck with horror at the villainy of Takuai, affected at the ſufferings of Ticking, and moved with tenderneſs at his generoſity, and that of his ſon. He commanded, that the wicked mandarin ſhould be ſtripped immediately of all his honours, and degraded; then baniſhed to the wildeſt and moſt inhoſpitable part of Tartary: that Tieking ſhould ſucceed him in the employment which he had rendered himſelf ſo unworthy of; and that Tiohang, under favour of the imperial protection, ſhould riſe in Pekin to the dignities of the empire. The courageous youth had the pleaſure of carrying thoſe orders to Taming; and having raiſed his virtuous father from the horrors of a priſon, to the higheſt office of his country, he had the pleaſure of reſtoring to an afflicted old man, his daughter, and to a tender lover the object of his affections. After which, being returned to Pekin, he gradually roſe to higher employments, till in time he attained the poſt of grand mandarin, became a model for wiſe miniſters, and rendered himſelf an object of love and admiration to the whole empire.

Account *of the* Egyptian Monuments *in the* Britiſh Muſeum.

THESE monuments were taken from the French army in Alexandria, and ſent to England in September laſt, under the charge of colonel Turner, and are now placed under ſlight temporary coverings in the court yard of the muſeum.

At either end of the firſt ſhed is a ſtatue of white marble, evidently Roman; the firſt ſuppoſed to be Marcus Aurelius, the ſecond Septimus Severus; but both of very inferior workmanſhip. They were diſcovered in the reſearches at Alexandria, and it is not known whence they originally came. The next fragment is a Ram's head, about four feet in length, carved from a ſoft red ſtone, called by the French *rouge grais*, and was brought from Upper Egypt. It has part of the right horn broken off; but the workmanſhip is exquiſite, and the expreſſion of the eyes exceeding good. The Ram's head repreſented the Deity called Amoun, whom the Greeks (who borrowed much of their mythology from Egypt) afterward adopted by the name of Ammon. Amoun denoted to the Egyptians the creative power of God, his beneficence and diffuſive influence through the works of nature. His chief temple was at Thebes; whence the epithet of Theban was given to the Ram; which was alſo a repreſentation of the Sun in Aries. They who deſire a further acquaintance with the ſymbolical attributes of Amoun, may conſult Jablonſky's Pantheon Egyptiacum. We next come to two Obeliſks, richly charged with hieroglyphics, and much reſembling in their general appearance the one at Mattareah, engraved in Dr. Shaw's Travels. Theſe obeliſks, it is ſuppoſed, were erected by the Egyptians as gnomons for aſtronomic uſes, and had anciently a ball on the top ſupported by a very ſmall ſhaft, the projection of whoſe ſhadow on the ground near that of the gnomon, formed an ellipſis, by which the middle determined by its poſition exactly enough the height of the centre of the ſun. They are of baſaltes, and were likewiſe brought from Upper Egypt. Between the obeliſks ſtands a large ſquare ſarcophagus or cheſt, compoſed of what the French call *berche verte*,

and appears to be of an aggregate kind, with which our mineralogiſts were before unacquainted. It was brought from the moſque of St. Athanaſius, in Alexandria. The hieroglyphic language inſcribed both inſide and out, denotes it to have been uſed for ſacred purpoſes. But whether as a cheſt for the images of the Egyptian deities, or as a ciſtern for the holy water uſed in the ſacred myſteries, does not appear. In form and ſize it ſeems to repreſent the great cheſt in the largeſt of the pyramids of Egypt, except that the latter, which was long taken for the tomb of Cheops, was unadorned with hieroglyphics. However, that this cheſt was ſomehow concerned with the myſtical worſhip of Oſiris, is more than probable: though it is not likely, as has been ſuggeſted, that it was one of the Adyta, or ſecret chambers, which had ſo great a ſhare in the Egyptian myſteries. That it was not placed on end, ſeems probable from the horizontal direction the hieroglyphics are drawn in. Its weight is nine tons, and among the ſymbols it is covered with, the ſacred monkey is frequently repeated; an animal that is not once mentioned by Jablonſky, though moſt claſſical readers will remember the alluſion to it at the opening of Juvenal's 15th Satire.

Quis neſcit, Voluſi Bythynice, qualia demens
Ægyptus portenta colat? Crocodilon adorat
Pars hæc: illa pavet ſaturam ſerpentibus Ibin:
Effigies ſacri nitet aurea cercopitheci.

Cloſe by the great cheſt lies a maſſive hand, of red granite, clenched. It is thought to have belonged to a ſtatue of Vulcan, and was found by the French among ſome ruins in the neighbourhood of Memphis. From its form it appears to have reſted on the knee; and the ſtatue it belonged to muſt have been at leaſt eighty feet in length. Beſide this is a ſmall fragment of a light red ſtone, having on it ſeveral diminutive figures, with three or four repetitions of the *crux anſata*. Such are the monuments ſheltered by the firſt covering; at the four corners of which are mutilated figures of Oſiris, of black granite, brought from Thebes.

At each end of the ſecond ſhed is a ſhaft of porphyry, the firſt of which is about three feet and a half diameter, and about four yards in length. Immediately ſucceeding, we have two figures of Oſiris, ſeated in black granite. He is repreſented with the head of a lion, round which we ſee the ſun, accompanied by the uſual head-dreſs of the Egyptians; from the neck downward he was repreſented as a virgin, and holds in his left hand the *crux anſata*, and on the ſeat are a few hieroglyphics. Oſiris, we know, was variouſly delineated, according to the attributes or operations of the Deity the Egyptian prieſts deſired to expreſs: and the figure we have here deſcribed was peculiarly ſymbolical of the heat, vigour, and influence of the ſun, in the inundation of the Nile, when it paſſed through the ſigns of Leo and Virgo. The *crux anſata*, however, is not ſo eaſily explained. The beſt and moſt accurate writers on the ſymbolical learning of the Egyptians have differed very widely in deſcribing it. Some have thought the *croſs* denoted the four elements of the world, and the *circle* the influence the ſun had over them. Others have thought the whole figure to be the name of the Divine Being who travelled through the world; ſome, the figure of the Deity, not made in the likeneſs of any creature; ſome, the philactery of Iſis; and others, that it was the ineffable image of Eternity. One writer has endeavoured, with a conſiderable ſhare of learning and ingenuity, to prove that it was the *acus nautica*, or mariner's compaſs, which he was willing to believe was known even to the Egyptians. All theſe conjectures only ſerve to ſhow that the myſtery couched under the ſymbolical learning of Egypt is inexplicable. Cloſe by the figures of Oſiris is a

mummy-cheſt of baſaltes, with a narrow border of hieroglyphics round the outer edge. This alſo came from Upper Egypt, and its uſes is immediately pointed out by the ſhape of the cavity, in which the figure of the head and legs is clearly ſeen. Next we have a fine ſarcophagus; its ſize is ſmaller than the one already mentioned, but its weight two ton more. It is compoſed, not like the former, of a breccia, but of black granite, and was brought from Cairo; and like the larger one, is covered with the hieroglyphic writing.—Cloſe adjoining is a broken figure of a woman, ſeated on her hams, and probably repreſenting Iſis; the poſition, as Porphyry aſſerts, is a type of the Deity's being retired within itſelf. Nigh this mutilated figure lies a cylindrical pillar of red granite, and cloſe to it part of a large caſe of black granite very neatly and plentifully adorned with hieroglyphics, and perhaps uſed for the preſervation of ſome of the ſacred veſtments or utenſils. It is rounded at the end, and, with one ſide of the ſmaller ſarcophagus, already mentioned, has been engraved by Niebuhr. This is followed by another ſtatue of Oſiris; beſide which there is a ſmall broken figure, kneeling, with hieroglyphics; it is of black granite, and like the greater part of its neighbours, came from Upper Egypt.

To this enumeration we muſt add a ſmall cheſt of Oriental manuſcripts, gathered by the French Inſtitute at Cairo; they are in number ſixty-two, and are chiefly Coptic, Arabic, and Turkiſh.

There are alſo two pieces of ancient ſculpture, which have not yet arrived at the muſeum; being at preſent depoſited, for the inveſtigation of the curious, in the library at Somerſet-houſe, belonging to the Society of Antiquaries. One has a triple inſcription, in the ſacred, the vulgar, and the Greek tongues; the latter of which is already engraved, and a tranſlation of it preſented to the ſociety by Mr. Stephen Weſton, whence it appears chiefly to relate to Ptolemy Philometer. The other is the ſtatue of a woman, ſitting on the ground, in black granite; between her feet the model of one of the capitals belonging to a column in the Temple of Iſis, at Dendera.

Having ſaid thus much of the Egyptian monuments, it may not be irrelevant to add a few words upon the hieroglyphics, which appear upon ſo many on them. Though in theſe Egypt ſhadowed out both the ſpiritual and phyſical world, yet it is not probable that a ſyſtem compoſed with ſuch conſummate ſkill, confined entirely to the acquaintance of the prieſts, and even by them delivered orally, can at this day be laid open to the world. The ravages of Cambyſes muſt at leaſt have deranged the knowledge of it; and Herodotus aſſerts, that in his time the prieſts were but mere pretenders to it. We are aſſured by Plutarch, that the hidden philoſophy of Egypt exhibited, even to thoſe who were initiated among the prieſts, but dark hints and obſcure reſemblances of the truth. And thus much the prieſts themſelves inſinuated, ſince they placed figures of the Sphinx at the entrance of their temples, as types of the enigmatical nature of their theology.

REFLECTIONS *on the general* STATE *of* LEARNING *at the Commencement of the* NINETEENTH CENTURY.

THERE are, in the hiſtory of mankind, a few periods which ſeem to claim the moſt decided attention of the philoſopher and the hiſtorian, from the importance of the events which have occurred from the improvements of ſcience and the arts, and the variety of views and reflexions which extraordinary characters and incidents give birth to. The era that has recently elapſed, abounding in tranſactions of the greateſt moment,

has been diſtinguiſhed beyond any other in hiſtory, by the ſucceſsful cultivation of literature, by the moſt extenſive improvements of ſcience and of philoſophy in all its different branches. No doubts can be reaſonably entertained on this head by any attentive obſerver of the civil and literary hiſtory of the country. The moſt correct and elegant of our poets, the moſt profound and inventive of our mathematicians and philoſophers, the moſt enlightened and impartial of our hiſtorians, have flouriſhed within the limits of the eighteenth century. On the commencement of this period, learning was protected by the foſtering favour of the court, which, adopting the idea and views of the ſplendid and ambitious reign of Louis XIV, gave a bias to the intellectual energy of the nation, which has been attended with the happieſt effect through every department of literature. Though this ſpecies of patronage be now fallen into diſuſe and decay, yet the ſpirited effort of individuals, unaided by external help, continue to ſupport that high celebrity which the country has juſtly acquired from the intrinſic and original merit of its literary productions. Toward the cloſe of the period above-mentioned, the views of our writers were directed toward a profound inveſtigation of metaphyſics and morals of political economy, and thoſe branches of learning which tend more immediately to the utility and the purpoſes of mankind. In thoſe walks of literature, works have been produced which are allowed by the general conſent of the republic of letters to be ſtandards in their kind, and to have fixed the fluctuating and unſteady nature of the ſubjects treated of, with a degree of certainty, approaching the nature of demonſtrative ſcience. Though ſome further improvements and additions may ſtill be expected from the boundleſs variety, and extenſive nature of the matters alluded to; yet the higheſt praiſe of original invention and patient inveſtigation, muſt be cordially beſtowed on thoſe ſublime and intrepid adventurers in philoſophy, who have opened a new world to our views, and boundleſs views of future fertility and cultivation, hitherto unexamined and unexplored.

The moſt ſtriking and obvious circumſtance in the preſent ſtate of literature, and which indeed cannot fail to preſent itſelf to every attentive obſerver of ſociety, is the wide diffuſion of general information among all claſſes and ranks of people, and the extreme facility with which ſeveral perſons, not previouſly qualified by a laborious courſe of ſtudy, aſſume the character and avocation of authors. Formerly, no ſmall portion of the life of a man was dedicated to the completion of a work, which was deſtined for immortality; and thoſe ſtupendous monuments of genius and induſtry, ſo few of which appear in our own times, were the fruit of aſſiduous toil and application, inceſſantly purſued for a period of ſeveral years. Like the towering oaks of the foreſt, they impeded the growth, and abſorbed the nutriment of inferior and leſs vigorous plants. But when a wider and more general cultivation takes place, thoſe ſublime and durable objects diſappear, and give room to productions of more elegance and leſs ſolidity, and to proſpects leſs ſtriking, but more obvious and inviting to the eye of common obſervers. In this view, the ſeeds of intellectual energy may be compared to the particles of light and heat, which diſcover greater intenſity and effect when their rays are concentred in a focus, and collected within a narrower ſpace. We may reaſonably ſuppoſe, that as important effects and extenſive improvements have flowed from a more general diviſion of labour in the mechanical arts, ſo the advantages accruing to literature and ſcience ſhould be commenſurate with the number and variety of their votaries. Doubtleſs, as far as continued and ſucceſſively repeated efforts are employed in ſuch branches as

depend on an application of this nature, no ſmall portion of increaſing improvement may be the reſult of experiment and inveſtigation. Accordingly, we are at liberty to obſerve that chymiſtry, and the arts ſubſervient to the purpoſes of manufactures and commerce in general, are making rapid ſtrides among us; which muſt be attributed, with every appearance of juſtice, to the great number of the cultivators of thoſe branches of ſcience; and as ſuch manifeſt advantages reſult to the intereſts of the nation from their unwearied efforts, they are entitled to expect every encouragement from government. This ſpecies of patronage, however, ſeems to be in a ſtate of decline, and adventurers and projectors in ſcience, as well as every other department, and ſphere of ambition, ſeem to fix their eyes on the public only, for the remuneration of their labours. That public, of courſe, muſt have its taſte and its intereſt conſulted in the productions which are ſubmitted to its examination; and accordingly we ſhall find, that the patronage of a court, and of a nobility, gives riſe to a more refined taſte in literature and the arts; and the patronage of the public gives a ſpring to thoſe exertions which have, in a more general view, utility for their ultimate object. Something of this nature is conſpicuous at the preſent period, from taking a glance at the ſtate of poetry and polite literature; that ſpecies of learning and talent, which has met with the moſt favourable reception from monarchs, and from the great. Though poetry be now cultivated with equal aſſiduity as in former times, it is chiefly for the purpoſe of private amuſement; and that branch of poetry, which is thought the moſt profitable, and comes immediately under the patronage of the public, I mean the dramatic, it is very evident, bears every mark of a degradation of taſte and refinement. This will not be denied by any perſon of judgment, who will take the pains to compare the effuſions of our contemporary dramatiſts with the more highly finiſhed productions of former times. The art of verſification has been likewiſe adapted to ſubjects hitherto not conſidered to come under the juriſdiction of the muſes; ſuch as ſubjects of political economy, of botany, and other deſcriptions of didactic compoſition, which furniſh further illuſtration of what I have advanced reſpecting the patronage of the public. As for general literature, comprehending criticiſm and miſcellaneous Eſſays, the form it has aſſumed, and the method of bringing it into circulation, exhibit ſtill more manifeſt evidence of the truth of theſe remarks, and proves the inceſſant efforts of authors and publiſhers to ſuit the taſte and the convenience of the public. Theſe two kinds of patronage, that of the public, and of the great, are attended with their reſpective advantages; in the one a refined taſte, and in the other a tendency to generally utility will neceſſarily predominate. By uniting both deſcriptions of patronage, important benefits might be expected; and during one period of our hiſtory, ſomething of a ſimilar nature ſeems to have been in exiſtence; but it was of a ſhort duration, and from every ſymptom we can diſcover at preſent, it does not ſeem probable that it will be revived or repeated in our own times.

It has been the faſhion of late to extol the liberal protection which literature and the fine arts are ſaid to have been favoured with by our own government for ſeveral years paſt; but upon examination it will appear that there are ſome objections to the credibility of ſuch a ſtatement. Certainly, writers of conſiderable merit have been rewarded, though not in the ſplendid ſtyle of former, and what may be called, better times; but it was not done with a view to their literary merit only, and the ſuppoſition is not altogether groundleſs, that the influence of their names in giving currency to certain opinions was the ruling motive for their remuneration.

An ILLUSTRATION *of the* DANGEROUS EFFECTS *of the* MODERN PHILOSOPHY, *exemplified in the Character of* JULIA.

[From Madame Genlis' Novel, entitled 'Le Mari Corrupteur,' now tranſlated from the French.]

IT happened, at the end of a philoſophical dinner at baron d' * * *'s, that the marquis de Clange, a favoured diſciple and paſſionate admirer of the Encyclopediſts, declared his intention of marrying, after a long heſitation on that ſubject. A general exclamation of diſapprobation immediately enſued. What! cried d'Alembert, will you ſacrifice the only true and real bleſſing, *liberty!* He delivered theſe words with a tone ſhriller and harſher than uſual, and with every mark of aſperity; for this philoſopher had a ſtrange antipathy to marriage, and even to the paſſion of love, which bore evident ſigns of the moſt capricious diſguſt and vexation. Though a child of love, he denied his father, who was avenged by the Graces, who always kept at a diſtance from this geometrical *Bel Eſprit*. You are ſtill young, ſaid Marmontel, and what ridiculous folly is it not, to form an everlaſting engagement in the middle of your career! Wait at leaſt, added Diderot, till we have eſtabliſhed our ſyſtem of divorce. Leave him at liberty to act, replied * * *. Have we not ſufficiently relaxed the ſevere duties of matrimony? — Gentlemen, replied the marquis, agree among yourſelves;—you diſapprove of my reſolution, though you have all declared againſt a ſtate of celibacy.—Yes, undoubtedly; but it is not marriage, ſurrounded with all the abſurdities and ſhackles of ſuperſtition, that philoſophy can ever endure.—Have you read my Supplement to Bougainville's Travels.—A pretty queſtion truly! The moſt ingenious and philoſophical of all your writings!—Well then, when we ſhall arrive at that perfection, and when every mind will be prepared to adopt your maxims as implicit truths, you ſhall then be at liberty to marry.—I mean to take, as my wife, a girl of fifteen.—Is ſhe pretty? ſaid Marmontel. She is a charming creature, replied the marquis; ſhe has a vaſt deal of natural ſenſe, and I promiſe you to make her in love with philoſophy. You know, that the patriarch of Ferney, recommends, above all, to win over the young women to the ſide of the good cauſe.—Yes, but I imagine he never relied on the *huſbands* for the accompliſhment of that purpoſe. At the early age of fifteen, with a ſuſceptible heart, and a romantic head, a huſband may be conſidered for a few months, at leaſt, in the light of a lover; I ſhall then have it in my power to take advantage of the firſt moments of love and deluſion, in order to form and direct her reaſon. You will ſucceed by that ingenious contrivance, replied d'Alembert, with a ſolemn tone; you will form an agreeable companion for your future days, and one to whom you will communicate the gift of reaſon, and every good quality of a man of merit.

The marquis de Clange, at the age of thirty-three, and bleſſed with an agreeable figure, was more remarkable for the ſhrewdneſs, than the extent of his underſtanding. He imagined himſelf to be a profound thinker, becauſe he indiſcriminately approved of all the philoſophical opinions which were then admitted by every deſcription of perſons. In his uſual converſation, he diſplayed ſome grace and vivacity; but when he took a fancy to reaſoning, he repeated, with the moſt ridiculous pedantry, all the common place ſentiments of his ſchool; and if they were contradicted, he ſmiled with a diſdainful compaſſion for his antagoniſt, and liſtened to no arguments, which to him appeared in

the light of prejudices, that were only to be encountered with a contemptuous ſilence. This conduct he called Toleration; indeed, he poſſeſſed no other kind of liberality, and hated with virulence every perſon of ſentiments different from his own. Though his vanity was exceſſive, he had not the misfortune of being a coxcomb. A ſtrong ſenſibility prevented that bias in his character. His paſſions were impetuous, and he had adopted with eagerneſs, all thoſe modern maxims of morality, which tend to favour the indulgence of the paſſions. With reſpect to other philoſophical ſyſtems, relating to Politics, Equality, and the Rights of Man, he only conſidered them as purely ſpeculative: he had never reflected deeply on them, nor evinced any extraordinary attachment to ſuch notions, only with the view of diſplaying his wit, and his liberality of ſentiment. He was not even ſtrongly attached to the brilliant advantages which he derived from his birth and his influence at court. He was on the point of marrying a young heireſs. Julia de Volmas (that was the name of the young lady) had the misfortune to loſe her parents at an early age. Her grandmother, who lived in a diſtant province, took on herſelf the charge of her education. Julia was impreſſed with excellent principles, and virtuous examples, and ſhe profited by them. She had, however, the misfortune of loſing her beſt friend and ſupport at the age of fourteen: her grandmother died, and ſhe was committed to the care of an old guardian, who brought her to Paris, and placed her in a convent. She had a large fortune, a charming figure, and every grace of youth and innocence. Her hand was ſought by the moſt diſtinguiſhed perſonages of the court, but the marquis de Clange obtained the preference. He was permitted to viſit Julia, and became paſſionately enamoured of her charms. He was himſelf an accompliſhed man, and Julia was delighted with the happy choice which her guardian had made. She was pious, gentle, ingenuous, and ſenſible, and the germ of every virtue was implanted in her boſom. She ſtill preſerved a ſentiment of regret for her grandmother; her inſtructions were always preſent to her mind, and her heart confirmed the dictates of her underſtanding. No duty appeared harſh or auſtere to her; ſhe followed, without effort, her own virtuous tendencies, and was ſolely occupied with her approaching deſtiny, reſpecting and cheriſhing a beloved huſband, an obligation which it coſt her no ſtruggles to reſiſt, ſo eaſy was every duty to her, and ſhe already conceived an affection for the man who was pitched upon to be her huſband. The marriage was celebrated on the firſt of May, the day on which Julia completed her fifteenth year. This circumſtance, the charming complexion, and natural attractions of Julia, gave birth, on her wedding-day, to ſongs and couplets above the ordinary ſtyle of thoſe uſually produced on ſuch occaſions. For the firſt time in her life, Julia was dreſſed in magnificent attire, in the height of faſhion, and liſtened to the ſeducing language of gallantry. Often, during the courſe of the day, vanity and love diſputed the empire of her heart, and frequently the ſenſations of both theſe paſſions were confounded together, and mutually enhanced each other by their combination.

Julia, according to cuſtom, had received, with her wedding dreſs, a purſe full of gold, which contained five hundred louis. She had always been charitable, and ſhe ſecretly devoted this ſum to the ranſom of priſoners. As ſhe was to quit Paris, after a few weeks, and to repair with her huſband to his villa, ſituate at two leagues diſtance from Paris, ſhe made a reſolution to perform that beneficent action the evening before her departure, becauſe her viſit and family vocations did not allow her the liberty of diſpoſing of a morning for any purpoſe of this deſcription.

On the ſecond day after her mar-

riage, it was annonnced to her, that ſhe ought to ſhow herſelf at places of public entertainment. She had been educated by her grandmother without auſterity, and without any prohibition of viſiting public ſpectacles; ſhe had only adviſed her to go ſeldom to them, and added that ſhe would do better by abſtaining from them totally. Julia expreſſed, with ſincerity, her deſire of being diſpenſed with attending her mother-in-law to the opera. She appeared diſpoſed to reſpect the ſcruples of her daughter-in-law, but the marquis de Clange attacked them with the bittereſt ridicule. Julia could not endure the idea of appearing ridiculous in the eyes of the man ſhe loved, and though he did not perſuade her on this occaſion, (for ſubmiſſion is not perſuaſion) he got the better of her principles. She ſacrificed them to love, and above all, to a reſpect for the opinion of the world, and ſhe appeared at the opera. The charms of the muſic and ſcenery, the pleaſure of attracting the eyes of admirers, made a very ſudden change in the ſentiments of Julia. Her huſband, who ſat behind her, felt a pleaſure in her ſatisfaction, and imagined he had gained an important victory. On his return home, he had a long converſation with Julia on this ſubject. My charming Julia, ſaid he, you have too much ſenſe to preſerve the prejudices of provincial education, and I am certain you will be ſoon ſenſible of their abſurdity. She was delighted to hear herſelf praiſed for her ſenſe, by a man who paſſed for poſſeſſing a great ſhare of it, and aſſured him that ſhe would reviſit the opera with pleaſure; and he, in his turn, acquainted her that he ſhould be very happy in finding that ſhe ſtill preſerved her religious ſentiments. He himſelf was no ſtranger to ſuch ſentiments, he ſaid; and this aſſurance delighted Julia, for ſhe knew not as yet the real meaning of that expreſſion, ſo often employed by the deiſts. A few days after, Julia was preſented at court. She was frequently at the theatre, after her introduction, and at laſt the marquis brought her to dine with his friends the philoſophers. On this occaſion, ſhe heard ſome converſations, which appeared rather ſtrange to her, and which ſhe did not perfectly comprehend. She avoided, however, aſking any explanation of them, from a dread of expoſing her underſtanding to the criticiſms of the company. But one day, the philoſophers converſed on the ſubject of luxury, and made a high-flown panegyric in favour of it; one of them, in particular, aſſerted, with great gravity, that a woman of faſhion is much more ſerviceable to the ſtate, by giving employment to milliners and manufacturers, than a devotee can be, by taking care of the ſick, relieving the poor, and ranſoming priſoners *. The company agreed in opinion with this philoſopher, and the marquis, particularly, was loud in his applauſes of that idea. Another philoſopher aſſerted, that benevolence was only a weakneſs, when it did not contribute to the utility and benefit of the public. In this manner, thoſe inſulated acts of charity, which have no general influence, as for example, the ſecret ſuccour of uſeleſs and helpleſs individuals, and many other actions of the ſame nature, are not to be deemed virtuous, and are evident inſtances of weakneſs. By the ſame rule, when an idea is entertained of beſtowing, relieving, or doing good, we muſt coldly calculate beforehand, whether thoſe actions may promote public utility, or not. Julia liſtened with ſurpriſe and ſilence: there were no abſtract ideas in theſe diſcourſes; ſhe comprehended them without difficulty, and they made an impreſſion, too deep to be immediately forgotten. On the following day, the converſation turned on the love of the country, and Roman ſentiments were oſtentatiouſly uttered, with which Julia was very much affected. In a few days after theſe harangues, ſhe went round among the tradeſmen; ſhe had never

* Helvetius.

before ſeen ſo many fine ſhops; ſhe was dazzled with their brilliancy, and ſhe then recollected the definition of a good female citizen. She loved her country, and in the ſhops of Baulard * and Sykes †, ſhe totally renounced her plan of ranſoming the priſoners, and the five hundred louis, with little deduction, were laid out in articles of dreſs, and Engliſh manufactures. On her return home, ſhe felt ſome remorſe for her conduct; but ſhe repeated to herſelf, I have performed an action of the greateſt utility to the ſtate, that a woman can poſſibly perform. Authors, and great men, expreſs themſelves in the ſame manner, and it is likewiſe the opinion of my huſband, who has ſo much experience, ſo much good ſenſe, and ſuch profound ſentiments of religion. Reflexions like theſe effectually ſilenced the ſuggeſtions of her conſcience.

The following day, Julia being alone in her cloſet, her waiting-maid, who had attended her from her infancy, entered her apartment, and acquainted her that ſhe had found out in the neighbourhood a poor old man and his wife, who were both ſick, and deſtitute of every neceſſary of life. The details of this affecting intelligence awakened Julia's ſenſibility, and ſhe reſolved to ſend to the unfortunate couple thirty louis, which ſhe ſtill had left: without acquainting her with her intention, ſhe roſe, and went to her chamber to get the money. She paſſed through the drawing-room, and there met with a milliner, who ſhowed her ſome lace edging, ſo fine and beautiful, that Julia could not reſiſt the temptation of examining it. She had hitherto only the lace that was choſen by her grandmother, and the gothic fancy of which was at leaſt of three or four years date. The young women of the family were liberal of their criticiſms on that article of her dreſs, ſhe was therefore ſtrongly allured by the lace, which was preſented to her examination, and which was aſſerted to be of the moſt exquiſite fancy and invention.—Without coming to any determination, or dimiſſing the milliner, ſhe retired to her apartment, and there maturely weighed with herſelf on the line of conduct ſhe ſhould purſue. If I beſtow my money on the old man and his wife, ſaid ſhe, I ſhall perform an action which will be attended with no benefit to the public. It might, indeed, ſatisfy the feelings of my heart, but that is nothing but a weakneſs; and if I buy the lace, I encourage the manufactures of Flanders.—On ſaying this, Julia conſidered the beauty of the lace, and heſitated no longer. Come, ſaid ſhe, taking the money, I muſt follow my duty—I muſt buy the lace. With theſe words, ſhe returned to the drawing-room, and very philoſophically ſecured the lace. The waiting-woman returned to ſolicit for the poor old man and his wife. The marquis ordered them a louis; the ſervant obſerved, that it was not ſufficient. Begone, replied Julia, with much gravity, my principles will not allow me to contribute any more.

* A Milliner. † A Jeweller.

HISTORICAL ACCOUNT OF GALVANISM.

[From 'Annals of Philoſophy,' &c. For the Year 1802.]

VOLTA, the ingenious inventor of the Galvanic pile, attempts to explain the electrical phenomena of Galvaniſm by the known laws of electricity, independently of any other principle. The author had before remarked, that when two different metals are placed in contact with each other, they become thereby not only conductors but exciters of electricity, or electro-moters; and in this latter property the metals exceed every other claſs of bodies; ſo that, when

a clean plate of ſilver and another of zinc (which two metals are reſpectively the moſt active and oppoſite to each other as electro-moters) are placed in contact with each other, by one or more points, the natural ſtate of electricity ſubſiſting in each before contact is changed, the equilibrium is broken, and the electric fluid paſſes from the ſilver to the zinc, ſo as to become rarefied, or in a negative ſtate, in the former metal, and condenſed, or poſitive, in the latter. This ſtate of oppoſition remains permanent (for a conſiderable time at leaſt) unleſs either of the metals is brought in contact with other conductors, which may reſtore the equilibrium of electricity, either by giving this fluid to the ſilver, or ſubtracting it from the zinc. The author then proceeds to examine the operation of a ſingle pair of metals, as a fundamental experiment, by which the whole theory of the Galvanic pile is to be explained. If two blades of metal, the one zinc and the other ſilver, are joined together at one extremity (either by rivetting or ſoldering, or any other method) ſo as to form one continued metallic arc, the zinc end will always be in a ſtate of poſitive electricity, and the ſilver in the negative ſtate. This difference, however, is too ſmall to be perceptible without particular management, and it is by the aſſiſtance of the condenſer, and the ſtraw electrometer connected with it, that the author gives a proof of what has been advanced. Volta's condenſer is compoſed of two metallic diſcs (made of copper or braſs) about three inches in diameter, and ground ſo as to apply very accurately one upon the other. The poliſhed ſurfaces, by which the contact is made, are covered with a ſlight layer of ſealing-wax, or gum-lac, or copal varniſh; and a glaſs handle, coated with ſealing wax, is fixed in the center of each diſc, in order to ſeparate them by pulling them aſunder, and to retain them in an inſulated ſtate. The condenſer being thus diſpoſed, the upper diſc being inſulated, and the lower communicating with the ground, the author takes the ſoldered blade of zinc and ſilver, and holding the zinc end in the hand, cauſes the ſilver end to touch the upper diſc of the condenſer for ſome time. On removing the metal, raiſing up the diſc by its glaſs handle and applying it to the ſtraw electrometer, it is found to have acquired two, three, or four degrees of minus, or negative electricity, by the contact of the ſilver blade.

If now the experiment is reverſed, and the ſilver blade held in the hand while the zinc end touches the condenſer, no effect whatever is produced if theſe two are in immediate contact; but if a piece of wetted card is interpoſed, the condenſer then acquires three or four degrees of electricity, which in this caſe is plus, or poſitive. The explanation which the ingenious author gives of theſe phenomena is the following: in the firſt inſtance (that is, where the hand holds the zinc end, and the ſilver touches the upper plate of the condenſer) the latter partakes of the ſame ſtate of electricity as the ſilver end, and both become negative, owing to the ſuperior attraction of the zinc, which is poſitive. This experiment too anſwers equally, whether or not a wet card is interpoſed between the ſilver and the condenſer: but in the reverſe experiment, when the zinc immediately touches the upper diſc of the condenſer, it is placed between two ſubſtances, namely, the copper of the condenſer and the ſilver blade to which it is ſoldered, each of which propel electricity into zinc with nearly the ſame force, and conſequently according to the laws of that fluid, the zinc being placed between two equal and ſimilar powers, the accumulation of electricity is ſo ſmall as not to be perceptible. It becomes, therefore, neceſſary to employ a third conductor of a different nature, a wetted card for example, which being a ſimple humid ſubſtance, is what the author terms a conductor of the ſecond claſs,

that is to ſay, a ſubſtance which, compared with the metals, poſſeſſes a much ſmaller force of electric excitement or electro-motion. The wet card being thus interpoſed between the zinc and the upper plate of the condenſer, the electric fluid, which is conſtantly propelled from the ſilver end held in the hand, into the zinc, paſſes the wet card without obſtacle, and proceeds to the condenſer where it excites about three degrees of poſitive electricity. Hence may alſo be explained, why the firſt experiment ſucceeds equally well without as with the interpoſition of a wet conductor; for in this caſe the zinc, which attracts poſitive electricity from every other metal, is in immediate contact with the hand, and the ſilver blade, and the copper plate of the condenſer, poſſeſſing nearly the ſame force of excitement, little or no mutual action takes place between them, to interrupt the free paſſage of poſitive electricity through each into the zinc.

To anſwer the objection which might be made againſt the explanation here given, from the contact of one or other of the metallic blades, with the hand that holds it, the ingenious author obſerves, that this may be entirely avoided, and the blade of the united metals oppoſite to that which touches the condenſer may remain entirely inſulated, and ſtill the ſame phenomena will take place, though not quite to the ſame electrometrical degree. It is neceſſary, however, in this caſe, to connect the inſulated blade with a large Leyden phial, which is neither charged nor inſulated, in order that it may furniſh or receive a conſiderable quantity of electricity.

DESCRIPTION OF THE ISLAND OF MALTA.

[By Aneas Anderſon.]

THE iſland of Malta is ſeparated from that of Goza, by a ſtrait of about five miles in breadth, in the centre of which appears the ſmall iſland of Cumina.

The greateſt breadth of Malta is about twelve miles, its length twenty, and it is ſixty in circumference. Goza is not more than half the former, either in circuit or diameter Cumina is not quite a mile in breadth, and about three miles long; but it is cultivated, and fruitful in corn. It poſſeſſes a fort, which was erected in the year 1618.

Malta contains two cities and twenty-two ſmall towns, or cazals, a derivative word from the Arabic, ſignifying a ſtation; and ſufficiently proves that theſe villages were gradually formed from the collected habitations of labourers, who ſucceſſively built their huts on thoſe ſpots which formed ſituations convenient to their particular employment. A riſe not diſſimilar to that of the borough towns of our own country.

Citta Vecchia, or the old city, whoſe ſcite is on the higheſt ground in the iſland, and near the centre of it was the ancient capital; but the city of La Valetta, where the government reſides, is the actual metropolis of the iſland. Its dependencies, which are encloſed within ſtupendous fortifications, are conſidered as ſo many diſtinct towns. Beſide the cazals, there are ſmall groupes of houſes ſcattered about the country. The coaſt is defended by entrenchments, batteries, and towers, from whence the inhabitants give advice, by ſignal or fires, of any ſuſpected veſſels that may be ſeen at ſea. Theſe towers, built at a ſmall diſtance from each other, and forming a curve, the extremities of which reach to the two caſtles, placed at the entrance of the harbour, repeat the ſignals with ſuch rapidity as enſures the prompt defence of the whole coaſt.

Beſide the two chief harbours between which the city of La Valetta is ſituate, there are ſeveral bays,

where veſſels may ride with ſafety. Two of the moſt conſiderable are St. Paul's Bay, and that of Marzo Scirocco, where the Turks landed in the year 1556.

The whole of the coaſt affords opportunities for landing, except the ſouthern part, which is bold, rocky, and of a great height.

The iſland of Goza has no harbour, but ſeveral bays. Its coaſts are alſo furniſhed with towers, whoſe ſignals, repeated by the fort at Cumina, very rapidly communicate the alarm to Malta. It contains one caſtle, one town, and ſix casals.

The city of La Valetta was built, or at leaſt its foundations were laid, in the year 1566. The elevation of the ſpot, and its poſition, between the two great harbours of the iſland, determined the choice of its ſituation. It derives its name from the grand maſter La Valette, who, after having ſuſtained a ſiege againſt the Turks, with very unequal numbers, and almoſt incredible efforts of courage, and fearing another and more powerful deſcent from the Ottoman troops, obtained ſupples from the court of Spain and cauſed the walls of the new city to be traced according to a plan conceived and laid down by himſelf. The inhabitants of either ſex and of every age made a voluntary offer of their labours toward building the city, which would not only prove their defence, but ſerve to increaſe their commerce and ſecure their wealth, as well as increaſe the importance of the iſland, by the additional protection it would give to the trade of Europe in the Mediterranean ſea.

La Valette dying in 1568, it was reſerved for his ſucceſſor, De Mont, to finiſh the work, and the whole was completed on the 18th of May 1571.

The principal attention in building this city was paid to the conſtruction of fortifications for its defence; and the chapel, called La Vittoria, built by La Valette, in commemoration of raiſing the ſiege, was at that time the only place of worſhip belonging to the order.

The knights of each nation were allotted a particular ſpot for their hotels: and that of the Engliſh knights, which has ſince been replaced by the Anglo-Bavarian, was fixed in the quarter of La Poloniſta.

It may alſo gratify curioſity to be informed, that the knights of each nation were ſeparately attached to the defence of a particular poſt, and that the aſſignments of them were according to the following arrangement:

The knight of		
Provence,	the baſtion of	St. John, &c.
Auvergne,	ditto,	St. Michael.
France,	ditto,	St. James.
Italy,	ditto,	St. Peter and St. Paul.
Arragon,	ditto,	St. Andrew.
England,	platform of	St. Lazarus.
Germany,	baſtion of	St. Sebaſtian.
Caſtile,	ditto,	St. Barbara.

La Valetta has already been mentioned as ſeated on a lofty part of the iſland; and it muſt now be added, that it projects boldly toward the ſea for about a mile, is waſhed on either ſide by two branches or inlets of it, and preſents, at the ſame time, a ſtupendous maſs of fortifications.

An ACCOUNT *of a* NEW METHOD *of ſupplying* DIVING-BELLS *with* FRESH AIR. *By* Robert Healy, A. B.

THE method of ſupplying a diving-bell with air, which has hitherto been generally adopted, renders it almoſt impracticable either to deſcend in water to any conſiderable depth, or to remain there a length of time ſufficient to perform any thing uſeful. Much inconvenience reſults from the attention which it is neceſſary to pay in admitting the ſupply from the barrels, which are uſed as reſervoirs of air; much alſo from the labour and

time which are expended in cauſing them to reach the bell. The mode of ſupply which Mr. Samuel Healy, my father, contrived, appears much calculated to remedy theſe inconveniences. A recital of the circumſtances that attended Mr. Healy's experiment, it is hoped, will not prove unintereſting.

Captain Lonſdale, of the Experiment, was employed to raiſe a brig which had foundered, in the year 1799, in the Bay of Dublin, between Dunleary and Howth. This he endeavoured to accompliſh by faſtening chains round the bow and ſtern of the ſunken veſſel, and by connecting to theſe a ring on each ſide, through which cables paſſed, and were laſhed at low water acroſs the deck of his ſhip, that acted as a buoy. Conſequently, on the tide riſing, if the faſtenings had not given way, the floating veſſel muſt either have ſunk itſelf, or drawn the other upward.

Mr. Healy accompanied captain Lonſdale in this attempt, in order to put in practice his mode of ſupplying a diving-bell with air. The bell, which reſembled a truncated cone, was made of wood, conſiſting of ſtaves united by cooperage: the mouth was two feet and a half in diameter; the top one foot and a half: the height was four feet. Windows were placed at proper diſtances round the ſides, and one at the top: there was alſo an aperture in the top for letting out foul air. In the inſide was ſuſpended a ſtage for the purpoſe of reſting on. On the top was fixed an iron eye, through which a cable paſſed for raiſing or lowering the bell. This eye was ſecured to the bell by four iron bars, of an inch ſquare, that went down the ſides and lapped under its edges. Within ſix inches of the bottom was fixed a broad iron hoop, of an inch thickneſs, from which weights were ſuſpended to ſink the bell.

On the ſhip's deck was laſhed a forcing or condenſing ſyringe, capable of containing about two quarts, to which were connected five fathom of iron tube, and to the end of this an equal length of leathern tube that turned into the bell. When the piſton was depreſſed, the contained air paſſed through the tubes, and was forced into the bell. Thus a conſtant ſtream of air was forced down.

Four hundred weight and a half being ſuſpended in the manner deſcribed, Mr. Healy was firſt let down rapidly, when, on ſignifying his deſire of aſcending, his wiſh was immediately complied with. He ſtated, that great uneaſineſs was felt, particularly in his ears, from ſuch a ſudden deſcent; that there was ſufficient light in the bell to enable him to read by light reflected through the mouth of the bell without removing the ſhutters of any of the windows; and alſo that he could ſee a good way down in the water. Having reſted a few minutes, and matters being arranged more ſatisfactorily, he was lowered gradually, and remained ſtationary about a minute at each fathom's depth; the ſyringe ſupplying ſuch a conſtant ſtream of air, that the bell was ſupercharged, and the ſignal of ſufficiency was often repeated. Having been more than half an hour down, and for ſome time on the deck of the ſunken veſſel, he gave the ſignal for aſcending, and was drawn up in the ſame gradual manner in which he had been let down.

He ſaid, that the very inſtant the mouth of the bell was immerſed a noiſe ſtruck his ears, which went off upon his reſting at the diſtance of a fathom from the ſurface: the next deſcent cauſed the ſame deafening ſenſation, the removal of which was effected, to a conſiderable degree, by repeated yawnings. No inconvenience was felt by his reſpiring air condenſed by the preſſure of ſix or ſeven fathoms water. A ſlight giddineſs remained a few minutes after his emerging, and the blood-veſſels about his face were a little ſwollen.

In the night, the laſhings having given way at high water, one of the rings through which the cables paſſed fell to the bottom. On the following

day he deſcended, in a gradual manner as before, to the depth of ſeven fathoms, in order to raiſe the ring, and remained below for an hour and ſome minutes. Not the ſmalleſt inconvenience was felt in his breathing. After coming up he coughed, and a ſlight tinge of blood appeared in his ſpittle. The fullneſs in his face, as alſo the giddineſs, occurred as in the laſt experiment. In this the bell did not appear to admit ſo much light as in the former experiment, although the papers explanatory of the communication of ſignals by pulling the ropes (which, for precaution, were fixed to the inſide of the bell) were ſtill legible. With the ſyringe one man ſupplied ſeven gallons of air in a minute, and, if neceſſary, could have ſupplied double that quantity.

The following morning the wind roſe to ſuch a degree as to break both the cables and chains that were attached to the ſunken ſhip, and of courſe interrupted the proſecution of further experiments; which, however, at a future period, Mr. Healy hopes to reſume. It is to be wiſhed that other adventurers will make ſimilar attempts, and improve on the hint which this trial affords; for, to uſe the words of Seneca,

Patet omnibus ars, nondum eſt occupata, multum ex illa etiam futuris relictum eſt.

On the DANGERS *attending a* LIFE *of* DISSSIPATION; *and the* FOLLY *of* DEPENDING *upon the* PROMISES *of the* GREAT.

IT is a remark, generally made by perſons who are under the influence of misfortune, that thoſe, which are brought upon themſelves, depreſs the faculties of the mind; while thoſe, which occur by the ordination of Providence, receive fortitude to ſupport, and vigour to ſuſtain their weight! Unhappily for me, I do not enjoy this conſolation, for the diſtreſſes under which I labour are the work of my own hands; yet as a deſcription of my imprudence may prove inſtructive to the incautious, I ſhall candidly relate the principal events of my life.

My father was a clergyman of the church of England, no leſs admired for the orthodoxy of his ſentiments, than the purity of his life; who, after waiting ſeveral years in the hope of obtaining preferment, at length had the good fortune to procure it, through the influence of his wife. My mother was diſtantly related to a nobleman's lady, with whom ſhe had reſided ſeveral years in a humble and dependant ſtyle, until, tired of the ſacrifices ſhe was continually obliged to make to the caprices of her protectreſs, ſhe reſolved by marrying my father to break through the bonds of conſtraint. He was at that time only curate of the pariſh, in which the peer reſided, but the living happened to be in that gentleman's gift, and the incumbent was ſo great a martyr to infirmity, that it was ſuppoſed he had not even many months to live. As the ſpeculation appeared good, and my mother poſſeſſed many perſonal attractions, my father thought he could not do amiſs by entering into the marriage ſtate; but the old gentleman's unexpected recovery defeated his expectations, and ten years elapſed before his wiſhes were obtained.

I made my appearance on the theatre in leſs than a twelvemonth after the connubial knot was tied, and for five ſucceſſive years my mother regularly made a practice of preſenting her huſband with an additional child. Theſe pledges of domeſtic love, at length ſoftened lady Sedley's reſentments, and ſhe frequently ſent my mother many acceptable proofs of regard, and by the aid of tears, prayers, and ſupplications, ſhe had the happineſs of completely ſoftening her heart. The conſequence of this reconciliation was an invitation to the hall; and I, as being the elder, was deſired to be brought, and as I happened at that age to have no ſmall portion of beauty

to recommend me, I immediately became a great favourite with the young lord. My viſits to the hall ſoon became very frequent, and were ſometimes protracted for the ſpace of a month; and at length I became ſo neceſſary to his lordſhip's pleaſures, that his mother propoſed my reſiding entirely at the hall. This propoſal of courſe my parents joyfully accepted, as they knew I ſhould have every advantage of education without the ſlighteſt expence; and from that moment I was placed under the care of lord Clifton's tutor, and received exactly the ſame inſtruction as himſelf. Though his lordſhip had at firſt a material advantage over me in his ſtudies, from being my ſenior between two and three years, yet as he was extremely indolent, and I was fond of application, I was ſoon his ſuperior both in Latin and Greek. This ſuperiority was ſo far from exciting any rivalſhip between us, that it ſeemed to ſtrengthen the bonds of friendſhip which we had formed, and I not only became neceſſary to his pleaſures, but always aſſiſted in the performance of his taſks.

I ſhall not give a detail of my boyiſh amuſements, but merely ſay, that when his lordſhip went to college I accompanied him there, and though he was entered as a fellow commoner, and I as a penſioner, I ſhared all his pleaſures without participating in the expence. Though my father had loſt two little ones in childhood, yet three of us ſtill remained; and he annually contrived to lay by the half of his income as a proviſion for my mother and her children at his death. The allowance therefore he made me, during my reſidence at college, would not permit me to live in an expenſive ſtyle, and I was continually receiving admonitory letters from him, imploring me never to run in debt. Theſe intereſting epiſtles, breathing all that ſolicitude which an anxious father was ſo likely to feel, produced little effect upon our imagination, which had imperceptibly acquired a fondneſs for expence.

As the earl had promiſed to procure me a place under government, I quitted the univerſity at the accuſtomed time; but when it was determined that lord Clifton was to ſet out for the continent, he begged that I might be permitted to attend his ſteps. Though I had ſeldom drawn upon my father for more than my allowance, yet he was no ſtranger to the diſſipated life I led; and he could not bear the idea of my adding the vices of foreign countries to thoſe he believed I already poſſeſſed; but how to avoid this, without offending my patron, was a difficulty he did not find eaſy to remove, but at length he determined candidly to tell him the full extent of all his fear.

Theſe, inſtead of commiſſerating, his lordſhip ridiculed; told him, that if I availed myſelf of the advantages of travelling, I might become under ſecretary of ſtate, and again repeated his former promiſes, of procuring me on my return a moſt advantageous place. Every thing of courſe was arranged for my departure, and we commenced our tour under the auſpices of the gentleman who had been the inſtructor of our youth; but we had become too independant to be guided by his councils, and thought it beneath men of our ſpirit to ſubmit to conſtraint. We entered into every ſpecies of faſhionable amuſement, with an avidity which alarmed the worthy Mr. Dawſon's fears, and as he had a real friendſhip for my father, he adviſed him to recall me from ſuch dangerous ſcenes. The advice, however, was too late for my lamented father to put in practice, who died the day before the letter arrived, and the grief which my poor mother felt upon the occaſion, was augmented by the diſtreſſing account of her child. She wrote, however, imploring me to return immediately to England, and ſaid the death of my father would be an apology to lord C——, and concluded by painting, in the moſt affecting colours, the ill conſequences which muſt attend my preſent mode of life.

Shocked as I at firſt was by the account of the death of my beloved father, yet the lively ſcenes I was engaged in ſoon diſſipated my gloom, and inſtead of attending to my mother's admonitions, I plunged ſtill deeper into the gulf of vice. We happened to be at Venice at the time of the carnival, and lord Clifton was peculiarly ſtruck with the charms of a lady of rank, who availed herſelf of the ſcene of licentiouſneſs that was going forward, to give him the moſt poſitive proofs of her regard. We had been ſtationary at Venice ſome ſhort time before the carnival, and were to quit it as ſoon as its gayeties cloſed, but this ſudden attachment completely ſubverted all the plans that had been previouſly formed. The lady was the widow of a Spaniſh nobleman, and had been attracted to Venice by the ſame magnet as ourſelves; and though a widow, ſhe was under the care of a duenna, who had lived in that capacity before ſhe became a wife.

Donna Iſabella, which was the name of this captivating female, for, in delicacy to her family, I ſhall conceal the title which ſhe bore, was certainly one of the moſt perfect pieces of human workmanſhip which the hand of nature ever formed. She had been united to a man old enough to be her grandfather, in compliance with her family's deſire, but the ſacrifice ſhe had made to their inclinations was terminated, at the end of nine months, by his death. The ſprightlineſs of youth was added to the lovelineſs of beauty, for ſhe did not appear to be more than eighteen, and her manners were more tinctured with the vivacity of the Italians than with the natural reſerve which the German ladies poſſeſs. While his lordſhip was paying his devotions to this enchantreſs, my buſineſs was to lull the ſuſpicions of her friend, who, with all her pretenſions to prudence, was not proof againſt my flattery, or the more expenſive marks of eſteem which lord Clifton frequently ſent. Though I was too great an admirer of female beauty, not to feel the power of Donna Iſabella's charms, yet I did not attempt to create any influence over her heart; for honour forbade the very idea of my endeavouring to obtain the ſlighteſt proofs of that lady's regard. Notwithſtanding this, I could not help obſerving, that whenever her eyes were turned toward me, a peculiar kind of ſoftneſs was expreſſed which it was impoſſible for me not to conſtrue into that favorable impreſſion which my more attractive figure had made upon her breaſt. This declaration may doubtleſs have the appearance of vanity, but in manly beauty I had a manifeſt ſuperiority over my friend, whoſe perſon was ſo extremely delicate and effeminate, that he had the appearance of a lady who had altered her ſtyle of dreſs.

Though Donna Iſabella had at firſt not only appeared gratified by his paſſion, but had likewiſe made it the moſt ardent return, yet ſhe ſoon began to change her conduct toward him, and behaved with mere civility, bordering upon reſerve. This alteration in the lady's conduct ſeemed only to add fewel to his flame, and he did every thing in his power to awaken her tenderneſs, and reanimate her breaſt with mutual regard.—Though ſhe treated his lordſhip with the moſt mortifying indifference, to *me*, ſhe behaved in a manner that convinced me of her eſteem, and if ever we were a moment together without a third perſon, her partiality was too evident to be miſconceived. I was too much attached to lord Clifton to avail myſelf of theſe teſtimonies, but at length ſhe gave me proofs of affection, which I was unable to withſtand, for I received a letter from Donna Iſabella, couched in ſuch ardent terms of tenderneſs, that they inſtantly made a paſſage to my heart. Honour, friendſhip, and all the ties of gratitude, inſtantly fled before this magic ſpell, and I aſſured her that my whole life ſhould be devoted to prov-

ing the ardency of my attachment, and the fervency of my regard.

Lord Clifton had ſo firm a reliance upon my conduct, that it was long before he ſuſpected the cauſe of the diminution of his miſtreſſes regard; but at length he obſerved the tender glances which paſſed between us, and the conſequence was, that his ſuſpicions were rouſed. Inſtead of upbraiding me for the diſhonorable part I had acted, he rather increaſed the confidence which he had formerly placed; and I was ſo far deceived by this appearance of cordiality, that I daily became leſs upon my guard. This was exactly what his lordſhip expected, and I became entrapped in the ſnare: in ſhort, he was watching all my motions, when I believed not any of them were obſerved. At length he diſcovered our place of aſſignation, and had the moſt convincing proofs of my ingratitude, and Donna Iſabella's caprice; when after upbraiding me with my conduct, and diſowning all further connexion with the lady, he deſired never more to behold my face.

The madneſs I had been guilty of, inſtantly flaſhed upon my imagination, and even the careſſes of Donna Iſabella loſt their charm; ſtill I flattered myſelf with the hope, that through the perſuaſions of our tutor, I might have the happineſs of regaining his lordſhip's regard. Vain hope! unfortunate infatuation! by which all my brilliant proſpects in life were overthrown; for Mr. Dawſon not only reprobated the ſhameful part I had acted, but informed me lord Clifton would not even allow him to mention my name. That worthy man, and his pupil, quitted Venice the very day after my ingratitude was revealed, and, as if to make my general conduct appear the more reprehenſible, lord Clifton no longer ſeemed to feel a reliſh for any faſhionable vice. Inſtead of devoting his time to thoſe pleaſures which injure the health, and relax the powers of the mind; he ſuddenly appeared to acquire a taſte for thoſe amuſements which are beneficial to the one, and give ſtrength to the other. Thus it was naturally ſuppoſed that I had been the inſtigator of his numerous vices, and a general odium was thrown upon my name. I was not only conſidered as a monſter, who had been guilty of the blackeſt ingratitude, but as a wretch who had endeavoured to tarniſh the luſtre of his friend's fame!

While Donna Iſabella continued to give me proofs of her attachment, I ſeemed to loſe the ſenſe of my ſituation in an intoxicating dream; but the moment ſhe began to ſhow the natural verſatility of her diſpoſition, I loſt the ſoothing ſolace which had quieted my heart. She required that her lovers ſhould be continually varying her amuſements, and though naturally volatile, ſhe had no reſources in her own mind; the conſequence was, that what ſhe admired one day, the next, perhaps, ſhe would ſay ſhe deſpiſed. Though her fortune was extremely large, yet ſhe was ſo completely ſelf-intereſted, that ſhe expected her lovers ſhould always pay for every amuſement to which ſhe went; and the moment ſhe found that my purſe was not calculated to gratify her love of pleaſure, ſhe quitted Venice without even informing me of her deſign.

I was obliged to remain until I received remittances from my mother, as I had not money enough to pay one half of my debts; however, the moment it arrived, I ſet out for England, reſolving, if poſſible, to make my peace with the peer. As it was the time of the year when the family were in London, I inſtantly drove to Portman-ſquare, but I had the mortification of hearing from the porter, that he had received orders not to admit me into the houſe.

As my father had never told me the ſtate of his finances, I had no idea that he would have left me more than a thouſand pounds, therefore I was moſt agreeably ſurpriſed at finding that my ſiſters and ſelf had each of us

double that ſum; and that two hundred a year, which he had left to my mother, was to revert to me at her death. It is true, he had not been able to ſave ſo large a ſum out of his living, but a ticket he had bought in the lottery had fortunately proved a good prize, and this, with a ſtrict attention to economy, had been the means of my fortune being ſo much larger than I had reaſon to expect. The mortification I had endured at being refuſed admiſſion to the earl's manſion, was greatly diminiſhed at hearing he was no longer at the head of public affairs; but that the honorable Mr. P——, with whom I had been intimately acquainted, then filled an important poſt in the ſtate. Upon that gentleman, therefore, I immediately waited, and was received by him with the warmeſt profeſſions of regard; and as the greateſt degree of animoſity ſubſiſted between him and my former patron, he gave me the moſt poſitive aſſurances of becoming my friend. He ridiculed the puritanity of lord Sedley's ſentiments for withdrawing his patronage from a young man, for no better cauſe than an intrigue; told me I was calculated to make a figure in ſociety, and gave me a general invitation to his houſe.

Elated with theſe profeſſions, I now reſolved to convince his lordſhip, that it would have been politic in him to have retained me for his friend; for I had the audacity in all companies openly to condemn his conduct, and even here, my preſumption and ingratitude did not end. The preſent, and the late adminiſtration, were at open warfare, and pamphlets, as uſual, were publiſhed on each ſide; I, of courſe, eſpouſed the cauſe of my preſent patron, and affixed my name to ſuch language, which I ought to have bluſhed to write.

The real rectitude of this amiable man's principles made him treat my invectives with the contempt they deſerved; but I now felt myſelf ſecure of Mr. P——'s patronage, though I had never received more than profeſſional proofs of his regard. My mother was ſo completely ſhocked at the depravity of my ſentiments, that ſhe could not bear the idea of encountering my former patron's ſight, and therefore determined to quit a ſmall houſe ſhe had taken in the neighbourhood, before the time that the family were expected to return. Inſtead of being biaſſed by the tenderneſs of her remonſtrances, I began to fancy myſelf a perſon of real importance to the ſtate, and ſo completely was my vanity inflated by this idea, that I already imagined that my fortune was made. In conſequence of this miſtaken opinion, I lived away in a moſt expenſive ſtyle, and kept an eſtabliſhment as if my fortune had amounted to two thouſand a year, inſtead of two thouſand pounds.

This diſplay of elegance of courſe was very tranſitory, and I ſoon found myſelf deeply involved in debt; it was no longer poſſible for me rely merely upon *promiſes*, therefore I determined to put Mr. P——'s friendſhip to the teſt. He appeared perfectly aſtoniſhed at hearing I was under any pecuniary embarraſſments, informed me, he had underſtood that my father had left me ten thouſand pounds; but again aſſured me, that I might depend upon his ſervices, adding, that he had been obliged to provide for thoſe to whom prior engagements had been made.

Compelled to appear ſatisfied with theſe evaſive anſwers, I remained ſix months longer under the torture of ſuſpenſe, when I accidentally heard that a place under government was vacant, which he had given me a poſitive promiſe that I ſhould poſſeſs. In all the ardour of expectation, I waited upon my patron, but was informed that he was giving a private audience to lord D——, and that the carriage was waiting until ſome affairs of buſineſs were tranſacted, when he was going to accompany that gentleman to his country ſeat. As every thing depended upon my obtaining this ſituation, by the help of

a bribe to the ſervant, I perſuaded him to deliver my card, on the back of which, I begged to ſpeak with him for two minutes upon buſineſs, which could not admit of being delayed; but the man inſtantly returned, ſaying his maſter could not ſee me, and would not be in town again for ten days.

All the horrors of my fate inſtantly flaſhed upon my imagination, and I returned to my lodgings in an abſolute frantic ſtate; however, I wrote to Mr. P——, and reminded him of his promiſe, without even venturing to hope that he would be biaſſed by what I ſaid, and the next morning I had the miſery of hearing that the place had been given to a perſon who had been recommended by lord D——. The adage, that misfortunes never come unattended, was completely verified in the ſtate of my affairs, for my creditors, worn out with repeated excuſes, provided an apartment for me in the Fleet!

My mother, with that tenderneſs I had ever received from her, inſtantly requeſted an amount of my debts, offering to relinquiſh one half of her income, and my amiable ſiſters making the ſame generous propoſal themſelves. Deſpicable as was the part I had formerly acted, I was not baſe enough to avail myſelf of their diſintereſted deſigns, and even then, my creditors muſt have conſented to receive a compoſition, as my debts amounted to treble what they could have paid.

In this wretched place of confinement I have had leiſure to reflect upon the impropriety of my conduct, but repentance, alas! can now be of no avail; yet ſtill I ſhall enjoy a pleaſing ſatisfaction, if the young and inexperienced are admoniſhed by my tale.

DELPHINE.

In order to gratify the Curioſity of our Readers, who may not have had an Opportunity of peruſing Madame Stael's 'Delphine,' *we have ſelected the following intereſting Epiſode from that celebrated Novel, which exhibits a ſtriking Inſtance of what the Authoreſs perpetually recommends as the Perfection of Happineſs, that is,* a Marriage of mutual Affection, *excluding all intereſted Motives, and the mercenary Conſideration of Parents and Friends.*

MADAME d'Albemar propoſed a walk to Leonce after dinner, telling him that a family from Languedoc, whoſe name ſhe thought ſhe recollected, had come to reſide cloſe by her, and that ſhe wiſhed we ſhould go together to enquire reſpecting them. We ſet out, and mad. d'Albemar ordered her carriage to meet us half a league from Bellerive.

When we approached the place where we were informed they reſided, we obſerved at a little diſtance, a cottage ſmall, but neat, and heard the ſound of voices and muſical inſtruments, forming a concert, which we thought uncommonly harmonious. On reaching the cottage, a child who ſtood at the door amuſing itſelf with making ſnow-balls, offered to ſhow us in; but the mother on hearing its voice, came out to meet us. Mad. d'Albemar, though ſhe had not ſeen her for ten years before, inſtantly recognized madlle. de Seuanges, whom ſhe had ſometimes met at the parties of M. d'Albemar. Madlle. de Seuanges, now mad. de Belmont, gave Delphine the moſt amiable and kind reception. We followed her into the little apartment, which ſerved as her parlour, where we found a man, about thirty years of age, ſeated before a piano-forte, on which he accompanied the voice of a daughter about eight years old. He roſe from his ſeat, at our entrance, and his wife immediately going up to him,

gave him the aſſiſtance of her arm, as he advanced to meet us. We then perceived that he was blind; but notwithſtanding the loſs of his ſight, his figure ſtill retained ſomewhat of an engaging and dignified air; while all his features diſplayed an expreſſion of ſerenity, which even repreſſed a riſing emotion of pity.

Delphine, whoſe heart is ſo acceſſible to the emotions of benevolence, was viſibly agitated, notwithſtanding all her efforts to conceal her feelings. She put a queſtion to mad. de Belmont, reſpecting the motives of her departure from Languedoc ——. The loſs of a law ſuit, anſwered ſhe, in which M. de Belmont and myſelf were engaged, plunged us into irretrievable ruin. I had already been deprived of one half my fortune, by an aunt having diſinherited me on account of my marriage. All that remains for my huſband, my children, and myſelf, is a revenue of eighty louis d'or. We preferred living in a country where we were entirely unknown, to the neceſſity of preſerving (without a fortune to ſuſtain the expence) our former connections in ſociety. Beſides, this climate agrees better with my huſband's health than the warm climate of the ſouth; and during the fortnight we have paſſed here, we find ourſelves perfectly pleaſed with the ſituation.

M. de Belmont then ſaid a few words to the effect of congratulating himſelf on being acquainted with a perſon of mad. d'Albemar's character. He expreſſed himſelf with conſiderable grace and propriety; and his wife, remarking with a feeling of pleaſure, that ſhe had ſeen mad. d'Albemar when but a child at her father's houſe, talked to her of their common relations with the moſt perfect ſimplicity and ſerenity. I looked at her attentively, but in no part of her manner could I diſcern the ſlighteſt trace of any cauſe of unhappineſs. She did not even ſeem to ſurmiſe that there was, in her ſituation, any thing which could excite an extraordinary intereſt, and it was a conſiderable time before ſhe perceived that with which it had inſpired our boſoms.

Her huſband, wiſhing to ſhow us his garden, gave his arm to his wife, in order to conduct him thither. She ſeemed to have been ſo much accuſtomed to lead him, that when, upon going to give ſome directions, ſhe for a moment intruſted his arm to Delphine, ſhe walked away with a kind of uneaſineſs, turned back repeatedly, and appeared not diſturbed, for ſhe has too much ſimplicity to be apprehenſive without a motive, but as if completely out of the habit of making a ſingle ſtep, except when ſhe performs the part of a guide to her huſband.

M. de Belmont every moment increaſed the intereſt which we had taken in his fate, by the charms of his wit, and the ſolidity of his underſtanding. We repeatedly engaged him in a converſation reſpecting his avocations and intereſts. He always replied to us with pleaſure, ſeeming completely to forget that he was blind and ruined, giving us the impreſſion of a man happy and tranquil, who, in the whole courſe of his life, has not had the ſlighteſt occaſion to practice any effort of courage, nor even of reſignation; only in pronouncing the name of his wife, and in calling her my dear friend, he ſpoke in an accent which I cannot define, but which vibrated to all the remembrances of his life, and made us comprehend them without their being expreſſed.

We returned to the houſe. The piano-forte was ſtill uncovered, and Delphine expreſſed a wiſh to M. and mad. Belmont, to hear, while preſent, the muſic which charmed us at a diſtance. They conſented to gratify her, informing us at the ſame time, that as they almoſt always ſung trios with their daughter, the piece of muſic we were to hear would be extremely ſimple. The father then executed a prelude on the harpſichord, in a ſtyle which evinced ſuperior talent and profound ſenſibility. I cannot con-

ceive a more affecting object than a blind man, inſpired with an enthuſiaſm for muſic. One would almoſt imagine that the diverſity of ſounds, and the impreſſions which they produce, give him back that enjoyment of all nature, of which he has been deprived. The timidity inſeparable from ſo unfortunate an infirmity prevent him from mentioning to others the regret which he feels, while they, on the other hand, almoſt always avoid talking of it to him. But when a blind man entertains you with a muſical air of a melancholy caſt, it ſhould ſeem as if he communicated the ſecret of his woes; and he rejoices in having at length attained that delicious language which permits him to melt the heart, without the fear of fatiguing it.

The beautiful eyes of my Delphine were filled with tears, and, from the heaving of her boſom, I could perceive the deep emotions of her ſoul! But when M. de Belmont and his wife began to ſing in concert, and their daughter, eight years old, mingled her clear infantile voice with thoſe of her parents, it was impoſſible to reſiſt the impreſſion. They gave us one of the airs ſung by the reaping girls of Languedoc, the ruſtic burden of which is to this effect:

O mother grant my fond deſire,
For life, my lover be my ſpouſe;
I'll love him with ſuch tender vows,
As you through life have loved my ſire.

The little daughter raiſed her eyes toward her mother as ſhe ſung theſe words. Her countenance beamed with innocence; but being brought up with parents who lived only in the exerciſe of the tender affections, ſhe had already in her look and voice that expreſſion of melancholy which is ſo intereſting at her age, that melancholy which is a preſage of the deſtiny that menaces the child, while ſhe remains unconſcious of the omen. The mother took up the ſame burden, varying the words in this manner:

The mother grants thy fond deſire,
For life, thy lover be thy ſpouſe;
And love him with ſuch tender vows,
As ſhe through life, has loved thy ſire.

As ſhe ſung the laſt line, there was ſomething ſo impaſſioned in the look of mad. de Belmont, and this emotion was ſoon ſucceeded by ſo much modeſty, that I felt myſelf penetrated with reſpect and enthuſiaſtic admiration for thoſe generous ties of family, which can inſpire at once ſuch heart-felt elation and happineſs. The father then ſung in his turn:

Be like thy mother, I deſire,
And take thy lover for thy ſpouſe;
And love him with ſuch tender vows,
As ſhe through life has loved thy ſire.

In pronouncing theſe words, M. de Belmont entirely loſt his voice; and it was with ſome difficulty that he recovered it, while all the three repeated the burthen in chorus, to a wild air which ſtill ſeemed to be returned on the ear by the echoes of the Pyrenees.

Their voices were perfectly adapted to each other. That of the huſband, deep and ſonorous, blended a dignified boldneſs with the ſoft tones of the females. Their ſituation, the expreſſion of their features, every thing harmonized with the pureſt ſenſibility. There was nothing to interrupt it; there was nothing wanting even to the imagination itſelf. Delphine has ſince told me that the commiſſeration which ſhe felt on beholding ſo perfect an union of all that could touch the ſoul, was ſo exceſſive, that ſhe no longer had ſtrength to ſupport it. She was quite overpowered with her tears, when mad. de Belmont threw herſelf almoſt into her arms and ſaid, 'Amiable Delphine, I know you well; but do you believe us unhappy? Ah! how much you are deceived!' Then, as if the muſic had ſuddenly confirmed our intimacy, ſhe placed herſelf near mad. d'Albemar, and ſpoke as follows:

'When I knew you ten years ago, M. de Belmont had already loved for ſome years; but as it was feared he would loſe his ſight, my relations oppoſed our marriage. He became entirely blind, and then I threw off all the reſerve which prudence had hitherto induced me to keep up with my

own family. Every moment's delay, when I was become ſo neceſſary to him, appeared to me inſupportable; and as I had neither father nor mother, I conceived I had the right of deciding for myſelf. I received him unknown to my relations, and for ſome time I ſuffered infinite pain in conſequence of their threats to annul our marriage! It was, however, aſcertained, that this was beyond their power, and they then endeavoured to ruin our fortune, in which they but too well ſucceeded: but as I had for ſome time feared they would be able to ſeparate me from M. de Belmont, I was ſcarce ſenſible to the loſs of our fortune: my imagination was entirely occupied with the misfortune I had avoided.

My huſband, continued ſhe, inſtructed his ſon, I educated my daughter, and our poverty connecting us more intimately with our children, yielded us new enjoyments when perfectly happy in our affections, thoſe misfortunes which tend by the force of circumſtances, to draw cloſer the bonds that unite us, ought to be regarded as the favours of Providence. I would not venture to ſpeak this before M. de Belmont, if I did not know that his blindneſs does not render him unhappy; but that accident has found him in the boſom of his family, and renders my arm, my voice, and my preſence at every moment neceſſary to him. He ſaw me in the ſpring of my youth, and he will always preſerve the ſame recollection of my perſon. I in my turn can love him, with all the delights, all the enthuſiaſm of paſſion, without any fear of the expreſſion of my ſentiments being leſs valued, in conſequence of the decay of my charms. I ſay this before M. de Belmont, madame, becauſe it is proper he ſhould know what I think of him, ſince I would not quit him for a moment, not even to have the pleaſure of praiſing him. The greateſt happineſs a woman can enjoy, is to have for her huſband a man whom ſhe reſpects as much as ſhe loves; who is ſuperior to her in mind and character, and who decides every thing for her, not becauſe he controls her will, but becauſe he enlightens her reaſon and ſupports her weakneſs. Even in circumſtances in which her opinion may differ from his, ſhe yields with pleaſure and confidence to him who is reſponſible for their common deſtiny, and who can alone repair an error if it ſhould be committed. The intention of nature is not accompliſhed in marriage, unleſs the merit of the huſband gives him a real advantage over the wife, an advantage which ſhe acknowledges, and of which ſhe is proud. Unhappy are thoſe women who are obliged to be the ſole judges of their own conduct, and to conceal the defects and the littleneſs of their huſbands, or to emancipate themſelves from them, and ſuſtain alone the burden of exiſtence! The greateſt of all pleaſures is, that admiration of the heart, which occupies every moment, gives an object to every action, creates a conſtant incentive to improvement, and above all, renders deareſt to us the true glory and the approbation of him, who honours us by his love. Amiable Delphine, do not eſtimate the happineſs or miſery of families, by the advantages they have received from fortune or from nature. Learn the degree of affection with which conjugal love has bleſſed them, and then only will you be able to aſcertain what is their portion of felicity on earth!

'She has not told you all, my kind friend,' ſaid M. de Belmont, 'ſhe has ſpoken of the pleaſure he has received from the exerciſe of the moſt unexampled generoſity. She ſacrificed every thing for me, who had no proſpect to offer her but a ſeries of unfortunate days, during which ſtill great ſacrifices were neceſſary. Rich, young, and beautiful, ſhe devoted her life to a blind man who was not only deſtitute of fortune himſelf, but made her be deprived of that which ſhe poſſeſſed. Among the treaſures of heaven, there exiſted an ineſtimable

bleſſing, and it has been beſtowed on me to compenſate for an evil which many unhappy beings have been condemned to ſuffer without any conſolation. An ardent and pure affection has the power of converting the real misfortunes of life into enjoyments. It affords me pleaſure to reflect that I cannot move a ſtep, unaſſiſted by the arm of my wife, and that I ſhould even be incapable of taking nouriſhment, if ſhe did not put into my hands the aliments ſhe intends for me. No new idea would enliven my imagination, if ſhe did not read to me the works with which I wiſh to be made acquainted. Every thought that reaches my mind, receives a charm from her voice: all my moral feelings arrive to me through her, and take their character from her. Providence gave me life, but left to her the care of completing that preſent, which would be uſeleſs and painful to me, without her aſſiſtance.

I believe, continued M. de Belmont, I love with more ardour than any other man, for all my being is concentrated in the ſentiment; but how does it happen that all men do not ſeek for happineſs in their own families? I am perſuaded, indeed, that no woman but my wife, could have rendered the marriage ſtate ſo delightful. I regret, however, that I never can ſee my children, but I am convinced they reſemble their mother. Of all the images which my eyes formerly collected, only one has remained perfectly diſtinct in my memory, and that is the figure of my wife. Her features are ſo ſtrongly impreſſed upon my mind, that I can ſcarce think myſelf blind when beſide her. Have you obſerved how ſweet her voice is? When ſhe ſpeaks, her accents are always ſoft and graceful, becauſe ſhe wiſhes to prolong the pleaſures I ſtill poſſeſs. I feel all, I forgot nothing; the touch of her hand, the tones of her voice never can be effaced from my recollection. Ah! how happy is that ſtate of exiſtence in which we can thus avow all the affections, and their charms! To enjoy it without experiencing any of thoſe inconſtancies of the heart, which are ſometimes the offspring of the ſplendours of fortune, or the brilliant gifts of nature.

Though my ſituation cannot be compared with that of any other perſon, I would declare to the grandees of the earth, to the beautiful and the young, that there is no happineſs in life except in marriage, in the affection of children, which never is perfect except when their mother is beloved and cheriſhed. Men, poſſeſſing more freedom of action than women, think they can eaſily find ſubſtitutes for domeſtic enjoyments; but I know not what ſecret force Providence has given to moral ſentiment; the circumſtances of life appear independent of its power, and yet it alone ultimately regulates them. No connections out of marriage are laſting: terrible events, or natural diſguſts, break thoſe bonds which were thought the moſt ſolid. Opinion purſues you, opinion in ſome manner or other always inſinuates a poiſon into your happineſs: and were it poſſible to eſcape from its empire, can the pleaſure of meeting occaſionally for a few hours in public circles, be compared with the happineſs ariſing from the perfect intimacy of marriage? What would have become of me had I not been bleſt by that ſtate? I could only transfer my cares to one who was too proud to ſhare them. How ſhould I have been able to ſtruggle againſt the order of ſociety? I whom nature has diſarmed. How neceſſary was the protection of conſtant and ſolid virtues to me, ſince I could acquire nothing myſelf, and could only hope for the happineſs which ſought me. But it is not merely conſolation I poſſeſs; I enjoy felicity itſelf; and I repeat it with confidence, that he who is not made happy by marriage is a ſolitary being, he is alone in the world, for he is condemned ſooner or later to live without being loved.

The OPINIONS *of Madame* DE STAEL *on the* SUBJECT *of* DIVORCE.

[From the SAME.]

In communicating to our Readers the Sentiments of Madame de Stael *on the Subject of* Divorce, *we conſider it a Duty incumbent on us to expreſs our unqualified* Diſapprobation *of the* general Tendency *of her Opinions on that, and likewiſe on other important Topics. We have every Reaſon to congratulate our Countrymen on their Abhorrence of* French *Syſtems, whether of Politics or Morality; and our only View, in publiſhing theſe Extracts, is to gratify the Curioſity of our Readers, by producing a few Paſſages from a Work of ſo much Celebrity, and which has been already introduced to the Public by Means of two rival Tranſlations.*

M. de Lebenſei to Delphine.

Cernay, Sept. 27, 1791.

HE whom you love is ever worthy of you, madam, but neither his opinions nor yours can contend againſt the fatality of your deſtiny. There only remains one means of re-eſtabliſhing your reputation, and of recovering the happineſs you have loſt. Collect, in attending to what I am now about to addreſs to you, all the ſtrength of your ſenſibility and your reaſon. Leonce is not irrevocably united to Matilda; Leonce may ſtill be your huſband; the law of divorce will be promulgated by the conſtituent aſſembly within a month. I have ſeen the law, and I am ſure it will be ſpeedily publiſhed. After having read theſe words, you will doubtleſs anticipate what is the ſubject on which I wiſh to reaſon with you; and the emotion, the uncertainty, feelings different and confuſed, will haraſs you to ſuch a degree, that perhaps you will not be able to continue the peruſal of my letter. Take it up a ſecond time. I am unacquainted with madame de Mondoville; her conduct toward my wife, has given me juſt grounds of offence; but ſtill be aſſured, I ſhall guard myſelf from any prejudice which this might create. Your happineſs is the only ſubject which occupies my thoughts; I know not what opinions you or your friend entertain on the ſubject of divorce; I can eaſily perſuade myſelf, that love would ſtrongly induce you to approve of it: but ſtill I know your reaſon and your feelings would reject happineſs itſelf, if it did not accord with the ideas you had formed of real virtue. Thoſe who condemn divorce, pretend that their opinion is founded on the moſt perfect morality: if this were the caſe, the wiſeſt philoſophers muſt have adopted it; for the firſt object of philoſophers is to know what are our duties, in all their extent. But I wiſh to examine with you, whether the principles which diſpoſe me to approve of divorce, are conſiſtent with the nature of man, and with the beneficent views which it is our duty to aſcribe to the Deity.

There is a great myſtery in love. Perhaps it is a celeſtial gift beſtowed on us by ſome angel on quitting the earth; perhaps it is a chimera of the imagination, which it purſues till the chilled heart is more allied to death than to life. No matter if I ſaw, in the feelings you indulge for Leonce, nothing but love; if I thought the character of his wife unſuitable to his, in every relation of life, I would not adviſe any ſteps to be taken to break aſunder their ties. But liſten to me attentively. In whatever manner human inſtitutions are combined, few perſons, of either ſex, would willingly renounce the only happineſs of exiſtence; that intimate confidence, that ſimilarity of feelings and ſentiments, that reciprocal eſteem, and that en-

dearing intereſt, which increaſes with every recollection. It is not for the delightful days with which nature has adorned the outſet of our career, to prevent us from reflecting on futurity, it is not for theſe days that ſimilarity of character is neceſſary; it is for that period of life when we ſeek, in the heart of another, the oblivion of that time which purſues us, that period when we are all abandoned by the world. The indiſſolubility of marriage, where there is the greateſt diſparity of characters between the parties, prepares for old age miſeries alleviated by no ray of hope. It ſeems only neceſſary to repreſs the deſires of the young; but it is forgotten, that deſires, thus repreſſed, will form the eternal regrets of the aged. Youth takes ſufficient care of itſelf. There is no occaſion for any anxiety about the employment or the pleaſures of youth; but all inſtitutions, all ſpeculations, ought to have for their object, the protection of advanced life; thoſe declining years which the moſt unfeeling cannot behold without pity, or the moſt intrepid without diſmay.

I am far from denying that divorce has its inconveniencies, or rather, that its neceſſity ariſes from the imperfection of human nature. It is the province of moraliſts, it is the province of opinion to condemn thoſe divorces whoſe motives cannot be excuſed but in the midſt of a civilized ſociety, which admits of marriages of conveniency, marriages which have no reference to futurity; where the laws can puniſh neither the relations who abuſe their authority, nor the parties who are deficient in the duties they owe each other; the prohibition of divorce operates only as a puniſhment to the ſuffering party. It only rivets the chains of marriage, without extending any influence over the circumſtances which render them cruel or delightful. The law ſeems to ſay, I cannot recover your happineſs; but I can, at leaſt, guarantee the duration of your ſufferings. Certainly morality muſt advance to a high pitch of perfection, before we can meet with many huſbands, who will willingly give themſelves up to ſufferings, without attempting to eſcape from them, in ſome manner or other; and if they do eſcape from them, if ſociety ſhows indulgence to them, in proportion to the ſeverity of the law, then all ideas of duty and of virtue are confounded; and, in civil as well as in political ſlavery, man lives liberated from the ſhackles which the laws impoſe.

It belongs to the peculiar circumſtances of the parties to determine whether a divorce authoriſed by law, can be approved by the tribunal of public opinion, and receive the ſanction of their own heart. A divorce which ſhould be founded on any misfortune which had befallen one of the parties would be one of the vileſt proceedings which could inter into the human imagination; for the preciſe object of the affections of the heart, and the ties of family, is to put us in poſſeſſion of friends who are independent of the ſucceſſes and reverſes of life, and thus to fix at leaſt ſome limits to the power of fortune over our deſtiny. The Engliſh, that moral, religious, and free nation, have, in their marriage ſervice, an expreſſion which is very affecting: *I take you* (the man and woman reciprocally pronounce) *in health and in ſickneſs, for better and for worſe*. Virtue, if at all neceſſary to make us ſhare in adverſity with thoſe with whom we have ſhared in proſperity—virtue, in this caſe only requires of us a ſympathetic ardour, ſo conſonant to the inbred feelings of a generous nature, that it would be totally impoſſible to experience any other emotion. But the Engliſh, who claim my admiration in almoſt every part of their civil, religious, and political inſtitutions, have erred in not admitting divorce except in caſes of adultery. The effect of this proviſion is to give independence to vice, and to hold virtue in bondage. It overlooks the ſtrongeſt of all oppoſitions—thoſe which may reſult from a difference of character, ſentiment, and principle.

Infidelity violates the nuptial vow;

but the impoſſibility of reciprocal love, deprives life of the greateſt happineſs allotted to it in the deſtinations of nature: an impoſſibility really exiſts, when it is recognized by time, reflexion, and even the judgment of our own friends and relatives. Who ſhall dare to pronounce that ſuch a marriage is indiſſoluble? An inconſiderate promiſe, given at an age when the law does not permit us to determine upon the ſlighteſt circumſtance of our external affairs, ſhall for ever decide the fate of a being whoſe years cannot be recalled, who muſt die—and die without having taſted the pleaſures of love!

The catholic religion is indeed the only ſyſtem which conſecrates the indiſſolubility of marriage; but it is becauſe it is the ſpirit of that religion to inflict pain upon man, under a thouſand different forms, as the moſt efficacious means of promoting his moral and religious improvement.

From the ſeverities of a ſelf-mortification, to the tortures decreed by the inquiſition in the ages of barbariſm, terror and ſuffering were the only inſtruments which that religion employed, to force mankind into the path of virtue. Nature, under the guidance of Providence, takes a courſe directly oppoſite: ſhe conducts man to all that is good for his moral and phyſical exiſtence, by the moſt attractive and the ſofteſt perſuaſions.

The proteſtant religion, which approaches much nearer to the pure ſpirit of the Goſpel than the catholic, avails itſelf not of pain either to terrify or to fetter the powers of the underſtanding. Hence it happens, that in the proteſtant countries of England, Holland, Switzerland, and America, the manners are more pure, crimes leſs atrocious, and the laws more humane; whereas in Spain, Italy, and all the countries in which catholiciſm reigns in its utmoſt rigour, public inſtitutions and private manners partake of the erroneous principles of a religion, which regards conſtraint and miſery as the moſt efficient means for the amelioration of man.

Nor is this all:—As this dominion of ſuffering is repugnant to the nature of man, he endeavours by a thouſand ways to eſcape from its yoke. Hence it is, that the catholic religion, if it has a few martys, makes ſo great a number of unbelievers. Atheiſm was openly profeſſed in France before the revolution. Spinoſa was an Italian. Almoſt all the ſyſtems of materialiſm have had their origin in catholic countries; while in England, America, in a word, all the countries where the proteſtant religion prevails, no one poſſeſſes that cheerleſs opinion. Atheiſm having, in thoſe countries, no ſuperſtition to combat, would appear only as the deſtroyer of the moſt ſoothing hopes of an exiſtence.

The Stoics, like the catholics, were of opinion that man is rendered more virtuous by misfortune; but their ſyſtem, purely philoſophical, was infinitely leſs dangerous. Each individual applying it to himſelf only, interpreted it according to his own inclination. It was not united with thoſe religious ſuperſtitions which have neither limit nor object. It did not give a corporation of prieſts an incalculable aſcendancy over the human ſpecies; for the imagination, though at firſt repugnant to ſufferings, when it is once prepared to endure them, yields to them with an abject ſubmiſſion proportioned to the difficulty of the conqueſt; and it is much eaſier to govern men who have been induced to inflict on themſelves the moſt cruel puniſhments, than thoſe who have been left to the guidance of their natural ſenſe, by impreſſing them only with the principles of reaſon and of happineſs.

One of the benefits which flowed from the evangelical ſyſtem of morality, was that of mitigating the rigorous principles of ſtoiciſm. Chriſtianity, beyond every other ſyſtem, breathed a ſpirit of beneficence and humanity; yet, by the moſt ſingular interpretation, has it been converted into a new ſyſtem of ſtoiciſm, which ſubjects the underſtanding to the will of the prieſts, whereas the ancient ſyſtem rendered

it independent of all mankind; a ſtoicism which makes the heart humble, while the other inſpired it with a dignified pride; a ſtoicism which wholly detaches you from the public intereſt, while the other devoted your life to your country; a ſtoicism, in ſhort, which employs pain for the purpoſe of ſubjugating the ſoul and underſtanding, while the other applied it, in order to invigorate all the powers of the mind, by the emancipation of our reaſon.

If theſe reflections, which I could extend much further, were not your own underſtanding, madam, ſufficient to ſupply them—if theſe reflections, I ſay, have convinced you, that he who would conduct mankind to virtue, by means of ſuffering, is regardleſs of divine goodneſs, and thwarts its expectations, you would agree with me in all the conſequences which I wiſh to deduce from them.

Enumerate all the duties which virtue preſcribes to us; our moral nature, nay more, the impulſe of our corporeal ſyſtem, every involuntary principle of action within us, urges us to the performance of thoſe duties.

Does it require an effort to attend to our parents, whoſe voice alone vibrates to all the remembrances of our life? If we could repreſent to ourſelves a neceſſity which ſhould compel us to abandon them, then it is that the ſoul would be doomed to the moſt painful torture! Does it require an effort to protect our children? Nature has decreed that the love which they inſpire, ſhould be more powerful than all the other paſſions of the heart. What greater cruelty could be inflicted, than the privation of this duty? Trace all the virtues, magnanimity, candour, pity, humanity—what laborious, what fruitleſs violence, would be offered to one's own diſpoſition, in order to obtain, in direct repugnance to his nature, his conſcious approbation of an act of uneaſineſs, meanneſs and cruelty! Whence proceeds this ſublime harmony between our being and our duties? From the ſame Providence which attracts us by a ſenſation of pleaſure toward every thing which is neceſſary for our preſervation. What! that the Deity, who has arranged every thing in the moſt eaſy and agreeable manner, for the ſupport of phyſical exiſtence, ſhould have placed our moral nature in oppoſition to virtue! That the reward of virtue ſhould be promiſed to us in an unknown world; but that in the preſent, of which we feel the real burdens, we muſt inceſſantly repreſs the ever-reviving aſpirations of the ſoul after happineſs!—that we ſhould repreſs this ſenſation, which is ſo delightful in its own nature, when not unjuſtly attempted to be ſubdued!

Of what fantaſtic irregularities are not men capable? Their creator had implanted ſympathy in their boſoms as a preſervative from cruelty; fanaticiſm has made them diſregard this inſtinct of the ſoul, by perſuading them that the being from whom this endowment of their nature ſprung, has commanded them to ſuppreſs it. All men are animated with an ardent deſire of happineſs; this deſire has been repreſented by hypocrites as the temptation of guilt. Thus have they committed blaſphemy againſt God; for the deſire of happineſs pervades every part of the creation. Doubtleſs this principle, like all others, is liable to the abuſe of being carried beyond its proper limits. There are circumſtances in which ſacrifices become neceſſary. Of this kind are all thoſe, in which the happineſs of others requires that you ſhould ſacrifice your own intereſt to theirs; but ſtill it is with the view of effecting the greateſt poſſible ſum of general felicity, that a few individuals muſt become the victims of ſuffering; and the means which nature employs in the moral as well as the phyſical world, are the enjoyments of life.

If theſe principles are founded in truth, can it be ſuppoſed that Providence requires of men to ſupport the bittereſt of all afflictions, in dooming them to inſeparable union with an

object which renders them profoundly miſerable? Could ſuch a puniſhment be enjoined by ſupreme goodneſs? And could it be exacted by divine mercy, as an expiation of error?

God has ſaid, *It is not good that man ſhould be alone.* His beneficent intention could not be fulfilled, if there were no means of ſeparation from an inſenſible, ſtupid, perhaps criminal woman, who could never enter into your feelings nor ſentiments! How abſurd muſt he have been, who dared to pronounce that there exiſted any ties which deſpair could not burſt aſunder! Death comes to relieve us from bodily ſufferings when our ſtrength is no longer able to bear them; and yet the inſtitutions of ſociety would make this life a Hoglin's priſon, which has no outlet!

The principal objection which can be made againſt divorce, is wholly inapplicable to the ſituation of M. de Mondoville, ſince he has no children. I ſhall not, therefore, repeat all that might be urged in removal of that difficulty. Nevertheleſs I will obſerve to you, that thoſe moraliſts who, in their writings againſt divorce, have argued from the intereſt of the children, have totally forgotten, that, if the poſſibility of divorce be a happineſs for men, it is alſo a happineſs for children, who will become men in their turn. Children are generally regarded as if they were always to remain ſuch: but the preſent children are the future ſpouſes; and you would ſacrifice the remainder of their life to their infancy, by depriving, on their account, mature age of a right which might, perhaps, one day, ſave themſelves from the horrors of deſpair.

In addreſſing a perſon of your vigorous intellect, it was incumbent upon me to diſcuſs the opinion which intereſts you in a general point of view. But how much ſtronger will my reaſoning appear, if we conſider only your particular ſituation! Leonce was anxious to be united to you. It is but by an artifice that he is the ſpouſe of mademoiſelle de Vernon. You have not been able to renounce your affection for each other. You paſs your life together. Leonce loves you only, exiſts for you only. His wife is perhaps ſtill ignorant of your attachment, but ſhe muſt ſoon diſcover it. Your generous conduct toward M. de Valorbe, was the firſt cauſe of the abominable injuſtice which you have ſuffered; but it was impoſſible, that ſooner or later your attachment to Leonce ſhould not have injured you in the public opinion. By a lucky chance which ſhould claim your bleſſing, you live in one of thoſe epochs when power deſpiſes not the aid of knowledge. In a month the law of divorce will have paſſed; and Leonce, in becoming your huſband, will honour you by his love inſtead of expoſing you to the ruin of your reputation. Do you fear the diſpleaſure of the world? You have ſeen my wife ſupported, perhaps with ſome difficulty; but I will aſſure you that this diſpleaſure will daily decreaſe. The ſyſtem of manners will become more auſtere; marriage will be more highly reſpected; and it will be felt that all theſe advantages have ariſen from the poſſibility of conjoining happineſs with duty.

It cannot be denied, that divorce, appearing to ſome as the reſult of a revolution which they deteſt, excites their diſapprobation more in this than in any other point of view; and as political animoſities are more readily directed againſt a man than a woman, it may happen that Leonce would expoſe himſelf to greater ſeverity of cenſure than you, in adopting a reſolution, which the ſpirit of party would condemn: but if a ſort of intrepid reaſon be neceſſary to women, in order to induce them to become the objects of public opinion; a man of ſenſibility ſhould feel no heſitation in taking meaſures to ſecure the reputation and happineſs of her whom his love may have expoſed to danger.

I am aware that M. de Mondoville

Mr. Garnet Terry's Mill.

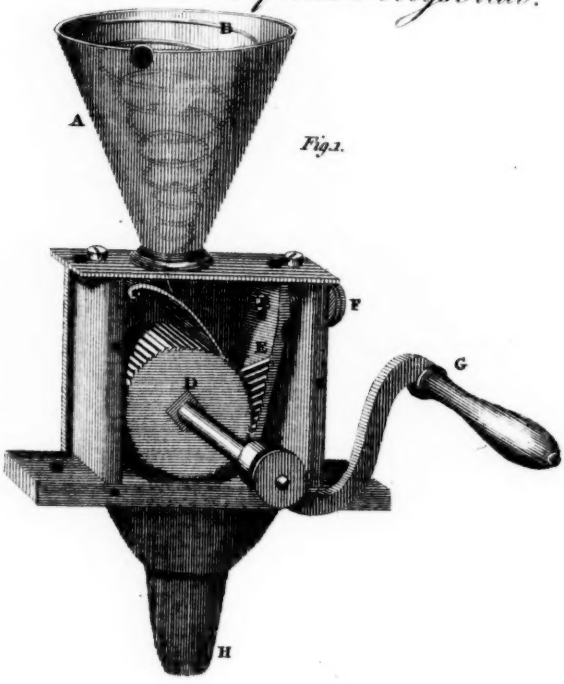

Fig. 1.

Mr. Bullock's Drawback Lock.

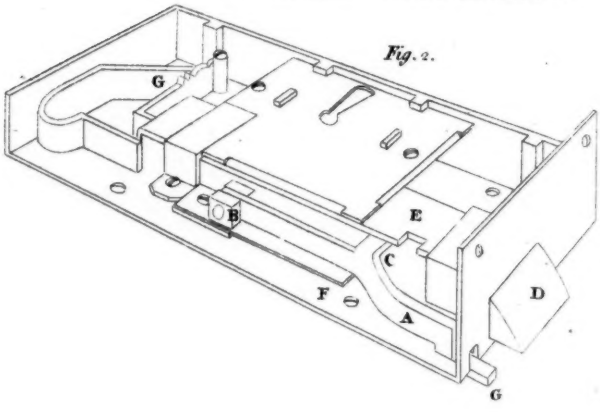

Fig. 2.

has been educated in a country, where the higheſt importance is attached to ancient opinions, as well as ancient uſages; but he is too enlightened, not to perceive that the illuſions which inſpited the ſublime virtues in former times, have not now ſufficient power to reproduce them. Uncertain remembrances cannot ſerve as a ſteady rule of conduct, and the civil and political virtues muſt be founded on a baſis which is more conformable to the principles of knowledge and reaſon. In ſhort, I have not the leaſt doubt, that it will only be neceſſary to inform M. de Mondoville of the poſſibility of divorce, to make him embrace with tranſport ſo fair a proſpect of happineſs. It would be unworthy of him to ſacrifice your reputation to his love, and to be attentive only to the preſervation of his own. It would be unworthy of him to emancipate himſelf, as he does, from the yoke of matrimony, and not to conſent to break it by a judicial deciſion! Would he acknowledge, that his paſſion for you is ſtronger than his duty, but that it would bend to the frivilous cenſures of ſociety? But I will ſtop ſhort—ſuch a ſuppoſition is impoſſible.

I have always thought that no man can be ſecure of his own happineſs, or that of the woman whom he loves, without diſdaining or ſubjugating opinion. M. de Mondoville is, of all characters, the moſt deciſive, the moſt ardent, the moſt energetic; and could it be, that he ſhould be dependent on the judgment of others, while he ſeems, more than any are, calculated to gain an aſcendancy over every mind? No! I cannot think ſo; and upon yourſelf alone will undoubtedly depend the deciſion of your deſtiny.

You excite, madam, ſo tender and profound an intereſt; you have conducted yourſelf with ſuch perfect generoſity, toward my wife and me, that I ſhould devote many years of my life to inſpire you with the courage to be happy. Heaven, love, friendſhip, all the generous influences will, I hope, aid the prayers which I offer up for you.

HENRY DE LEBENSEI.

DESCRIPTION *of Mr.* Garnet Terry's *improved* MILL *for grinding* HARD SUBSTANCES:

Illuſtrated by a Plate.

[From the Tranſactions of the Society of Arts, &c. Vol. 19.]

To Mr. CHARLES TAYLOR.

Sir,

I HAVE taken the liberty of ſending, for the inſpection of the ſociety for the encouragement of arts, &c. a ſmall mill calculated for the purpoſe of grinding hard ſubſtances.

I have made one on a large ſcale, and find it anſwers the purpoſe of reducing to powder, coffee, bones, aſhes, and other ſuch things: it has alſo been tried, and found effectual and expeditious, in breaking down beans, peas, malt, barley, &c. If it is worth the notice of the public, I beg you will make ſuch uſe of it as the ſociety may think proper *.

I am, &c.

GARNET TERRY.

No. 20, City-road, Finſbury-ſq.

See the Plate, Fig. 1.

A. The hopper, or receptacle of the articles which are intended to be ground.

B. A ſpiral wire, in the form of a reverſed cone, to regulate the delivery of them.

C. An inclined iron-plate, hung upon a pin on its higher end: the

* The ſilver medal was adjudged to Mr. Terry.

lower end reſts on the grooved axis D, and agitates the wire B.

D. The grooved axis, or grinding cylinder, which acts againſt the channelled iron-plate E.

F. A ſcrew on the ſide of the mill, by means of which the iron-plate E is brought nearer to or removed further from the axis D, according as the article is wanted finer or coarſer.

G. The handle, by which motion is given to the axis.

H. The tube from which the articles, when ground, are received.

§ The front of the mill is taken off, in order to ſhow its interior conſtruction.

DESCRIPTION *of Mr.* Bullock's *improved* DRAWBACK LOCK: *Illuſtrated by a Plate.*

[From the SAME.]

Sir,

I HAVE herewith ſent, for the inſpection of the ſociety, an improved drawback lock for houſe doors, &c. which improvement is in latching the door; for it is well known, particularly in damp weather, that the air drawing through it, ruſts the head or bevel of the bolt, by which means it requires great force to ſhut the door, and occaſions a diſagreeable noiſe, beſide ſhaking the building.

It has frequently happened that the houſe has been expoſed to robbery from the door being left unlatched, when ſuppoſed to be faſt. This improvement removes all thoſe inconveniences, as it lets the bolt ſhoot into the ſtaple immediately when the door cloſes, but not before; and the reliever works ſo very eaſy, that the door is made faſt with one twenty-fourth part of the force required with locks upon the common conſtruction.

By an experiment with the lock ſent herewith, it will be proved that two ounces added to the reliever, will ſhoot the lock with more eaſe than three pounds will do, applied to the bevel bolt; and if the lock is ruſty, the advantage will be much more in favour of the new method. I flatter myſelf it will be of great utility to the public, as its conſtruction is ſimple and cheap. It may be added to any old lock, as may be ſeen from that now ſent. It may be advantageouſly applied to French windows and glaſs doors, as it prevents the door from being ſtrained, or the glaſs broke, by the force applied to ſhut them. I have fixed ſeveral locks, upon this new principle, which anſwer well; and if the invention meets with the approbation of the ſociety, I hope to be rewarded according to its merit *.

I remain, &c.

WILLIAM BULLOCK.

No. 6, Portland-ſtreet, Soho.

See the Plate, Fig. 2.

A. Is the new iron latch here affixed to an old common drawback houſe lock.

B. An iron pin at one end of the latch, on which pin it is moveable.

C. A projecting part of the latch, which, when the common ſpring bolt D of the lock is drawn back, in the uſual manner, is forced into the nick on its higher part at E, by the ſpring F, underneath the latch.

The bolt D then remains within the lock, until, on cloſing the door, the reliever G gently preſſes on the lock box, fixed in the common way on the door cheek; which preſſure draws the projecting part C out of the nick E, and permits the end of the bolt D, by the force of the ſpring G, to ſlide into the lock box, and faſten the door.

* A bounty of fifteen guineas was voted to Mr. Bullock.

A DESCRIPTION OF THE ISLAND OF CEYLON.

In our Magazine for January and February 1796 *is an Account of the Iſland of* Ceylon; *to which we refer for its Hiſtory previous to the* Dutch *ſurrendering their Poſſeſſions to the* Engliſh, *and alſo for its Animal and Vegetable Productions. But as the open Tracts all round the Coaſts of that Iſland are now a Part of the* Britiſh Empire, *and likely to become of vaſt Importance both in a commercial and political View, our Readers will be gratified by the Communication of ſome further Particulars. Theſe we ſhall ſelect, with ſome little Alterations, from an* Account of the Iſland of Ceylon, *recently publiſhed, by* Robert Percival, *Eſq. of his Majeſty's nineteenth Regiment of Foot, who arrived on the Iſland in* 1797, *travelled completely round it, and was among thoſe Officers who accompanied the Embaſſy to the King of* Candy *in* 1800.

CEYLON, an iſland in the Indian ocean, at the weſt point of the entrance of the bay of Bengal, is ſituate between 5° 50′ and 9° 50′ north latitude, and 79° 40′ and 81° 50′ eaſt longitude. On the northweſt it is ſeparated from the Coromandel coaſt by Palk's ſtrait and the gulf of Manaar, which are full of ſhoals, and impaſſable by large ſhips. Its circumference is computed to be about 900 miles; and its length, from Point Pedro at the north extremity to Dondra Head at the ſouth, is 280 miles. Its breadth is very unequal, being in ſome parts only from 40 to 50 miles, while in others it extends from 60 to 120. Toward the ſouthern parts it is much broader than in the northern, and nearly reſembles a *ham* in ſhape. The peninſula of Jaſnapatam has hence received from the Dutch the name of Hamſheel, and Point Pedro they call Hamſheel Point.

As the iſland is approached from the ſea, it preſents a freſher green to the eye, and has every way a more fertile appearance than moſt parts of the Malabar and Coromandel coaſts. All the flat tracts on the ſea ſhore are bounded by beautiful *topes*, or groves of cocoa-nut trees, while the intermediate plain is covered with rich fields of rice; and the proſpect uſually terminates in woods, which cover the ſides of the mountains, and diſplay a verdant foliage through every ſeaſon of the year.

The appearance of the eaſtern coaſt is bald and rocky, and a few reefs of rocks run out into the ſea on the ſouth-eaſt between Point de Galle and Batacolo. The deep water on the eaſtern ſhores admits the approach of the largeſt veſſels in ſafety; and if that ſide of the iſland be the leaſt fertile, its other defects are amply compenſated by the harbours of Trincomale and Batacolo. The north and northweſt coaſt from Point Pedro to Columbo is flat, and every where indented with inlets of the ſea, frequently of conſiderable magnitude. The largeſt of them extends almoſt quite acroſs the iſland from Mullipatti to Jaſnapatam on the northweſt point of the iſland; and forms the peninſula of Jaſnapatam. Several of theſe inlets form ſmall harbours; but ſo full is that coaſt of ſand-banks and ſhallows, that it is impoſſible for veſſels of a large ſize to approach them. Small craft, however, find ſtations here ſufficiently convenient and ſecure.

The interior of the iſland abounds with ſteep and lofty mountains, covered with thick foreſts, and full of almoſt impenetrable jungles. The woods and mountains completely ſurround the dominions of the king of Candy, and ſeem deſtined by nature to defend him againſt thoſe foreign enemies, whoſe ſuperior ſkill and power have deprived him of the open tracts on the ſeacoaſt. The moſt lofty range of mountains divides the iſland

nearly into two parts, and ſo completely ſeparates them from each other, that both the climate and ſeaſons on either ſide are eſſentially different. Theſe mountains alſo terminate completely the effect of the monſoons, which ſet in periodically from oppoſite ſides of them; ſo that not only the oppoſite ſeacoaſt, but the whole country in the interior ſuffers very little from theſe ſtorms.

The monſoons in Ceylon are connected with thoſe on the Coromandel and Malabar coaſts, and very nearly correſpond with them; but they ſet in much ſooner on the weſtern than the eaſtern ſide of the iſland. On the weſt ſide where Columbo lies, the rains prevail in the months of May, June, and July, the ſeaſon when they are felt on the Malabar coaſt. This monſoon is uſually extremely violent, being accompanied with dreadful ſtorms of thunder and lightning, together with vaſt torrents of rain, and violent ſouthweſt winds. During its continuance, the northern parts of the iſland are very little affected, and are even generally dry. In the months of October and November, when the oppoſite monſoon ſets in on the Coromandel coaſt, it is the north of Ceylon which is affected, and ſcarcely any impreſſion of it is felt in the ſouthern parts.

Theſe monſoons paſs ſlightly over the interior, and ſeldom occaſion any conſiderable inconvenience. But this part of the iſland is not altogether freed from the dreadful ſtorms which ſo terribly ravage the tropical climates. During its own periodical ſeaſon, which happens in March and April, the rain pours down in torrents, and the thunder and lightning are awful to a degree almoſt inconceivable to an European.

From the ſituation of this iſland, ſo near the equator, the days and nights are always of nearly equal length; the variation during the two ſeaſons not exceeding fifteen minutes. The ſeaſons are more regulated by the monſoons than the courſe of the ſun; for although the iſland lies to the north of the line, the cooleſt ſeaſon is during the ſummer ſolſtice, while the weſtern monſoon prevails. Spring commences in October, and the hotteſt ſeaſon is from January to the beginning of April. The heat, during the day, is nearly the ſame throughout the whole year; the rainy ſeaſon, however, renders the nights much cooler, from the dampneſs of the earth, and the prevalence of winds during the monſoons. The climate, upon the whole, is much more temperate than on the continent of India. This is owing to the conſtant ſea-breezes by which it is fanned, without being ſubject to the hot and ſuffocating land-winds, which ſo frequently annoy the continent. For this reaſon, although the perpendicular beams of the ſun muſt of courſe be intenſely hot, the ſhade and the houſes always afford a tolerably cool retreat.

This temperate climate, however, is chiefly confined to the coaſt where the ſeabreezes have room to circulate. In the interior of the country, owing to the thick and cloſe woods, and the hills which crowd upon each other, the heat is many degrees greater than on the ſeacoaſt, and the climate often extremely ſultry and unhealthy.

The principal harbours in the iſland for large ſhips, are Trincomale and Point de Galle; they alſo come to anchor, and at certain ſeaſons of the year moor ſecurely, in the roads of Columbo. There are ſeveral other inferior ports all around the iſland, which afford ſhelter to the ſmaller coaſting veſſels. Theſe are Batacolo on the eaſt; Matura on the ſouth; Barbereen, Caltura, Negombo, Chilou, Calpenteen, and Manaar on the weſt; and Point Pedro on the north. At all of thoſe places are rivers of greater or leſs magnitude emptying themſelves into the ſea. Theſe rivers, which are for the moſt part broad, deep, and navigable for ſome diſtance by ſmall craft, are of eſſential benefit to the inhabitants of the parts adjacent to the coaſt, as they afford a cheap and eaſy

method of conveying their produce and merchandiſe to thoſe places where European veſſels wait to receive them.

But theſe rivers, although unuſually ſmooth at their immediate outlet into the ſea, are ſeldom navigable to any conſiderable diſtance. As ſoon as they enter the mountains which cover the native kingdom of Candy, they become rocky and rapid; and tumble down with ſuch a headlong courſe that it is impoſſible for the ſmalleſt canoe to navigate them. This is one great cauſe of the little intercourſe which ſubſiſts between the natives in the higher country and thoſe who live under the dominion of the Europeans on the ſeacoaſt, as the way by land is equally difficult, nor have the natives been ever anxious to ſurmount theſe obſtacles.

The two principal rivers are the Malivagonga and the Mulivaddy. The former takes its riſe among the hills to the ſoutheaſt of Candy, and nearly ſurrounds that city. After a variety of circuitous windings among the mountains, it at laſt diſcharges itſelf into the ſea at Trincomale. This river is ſo deep as to be fordable only toward the ſource; but the rocks which every where break its courſe prevent it from being navigated. The Malivagonga riſes from the foot of a very high mountain, known to Europeans by the name of Adam's Peak, and ſituate about ſixty miles to the northeaſt of Columbo. This river falls into the ſea by ſeveral branches: the largeſt of theſe, called the Mutwal River, empties itſelf about three miles from the fort of Columbo, after having nearly ſurrounded a large tract of the level country, of which it forms a very beautiful peninſula. The country along the banks of the Mutwal for many miles is extremely picturesque and delightful; and I had an opportunity of experiencing its utility in accompanying an eſcort from Columbo to Sittivacca in the interior, a diſtance of thirty-five miles; for while we marched along the beautiful banks, our ammunition and ſtores were commodiouſly tranſported on the river in boats.

Beſide the rivers with which Ceylon abounds, there are many lakes and canals communicating with them, particularly, in the neighbourhood of Columbo and Negombo. They are often of conſiderable extent, and of very great utility to the inhabitants in their neighbourhood, who have thus an opportunity of readily tranſporting their ſeveral articles of trade; and it is by this means alſo that the towns on the coaſt are ſupplied with the greateſt abundance of freſh-water fiſh.

The internal communications by land through the iſland have ſcarcely paſſed the firſt ſtage of improvement. Along the ſeacoaſts indeed there are roads and ſtations for travellers; but theſe roads are in many places rugged and ſteep, and are not only difficult but dangerous from the numbers of wild hogs, buffalos, and elephants, which infeſt them. Theſe animals are met particularly from Chilou to Manaar, and from Matura to Batacolo; in theſe roads they ſometimes occaſion accidents. Since the iſland has come into the poſſeſſion of the Engliſh, the roads have been greatly improved. Governor North ordered a general ſurvey of them to be made, and the diſtances to be aſcertained, previous to adopting meaſures for facilitating the communications.

To ſpeak of the ſoil in general, it is ſandy, with but a ſmall mixture of clay. In the ſouthweſt parts, however, particularly about Columbo, there is a great deal of marſhy ground, very rich, and exceedingly productive. This tract, however, is chiefly occupied with cinnamon plantations, and the reſt of the iſland, in its preſent ſtate of cultivation, does not produce a ſufficient quantity of rice for the conſumption of its inhabitants; but requires yearly ſupplies from Bengal and other places on the continent. This is entirely owing to miſmanagement, for with proper attention the

neceſſity of importation might be entirely ſuperſeded.

The iſland of Ceylon was originally divided into a number of diſtinct petty kingdoms, ſeparated by the ſeveral rivers and mountains which are diſperſed over the face of the iſland, and ſubject each to its own independent ſovereign. In proceſs of time, however, the whole country was reduced under the dominion of the king of Candy, and divided by him into a few great provinces, from which ſeveral of the numerous titles he ſtill retains were derived. Theſe provinces were Candy, Coitou, Matura, Dambadar, and Sittivacca, which included the rich diſtricts on the weſt coaſt. The chief of theſe provinces was Candy: it was ſituate in the centre of the iſland, and honoured with the royal reſidence. The king holds his court there to this day; and though all the other provinces have been more or leſs encroached upon, no part of Candy has ever been reduced to permanent ſubjection under a foreign power. Theſe provinces were ſubdivided into diſtricts, known in that country by the name of *corles*, and correſponding to our ſhires or counties. Theſe ſubdiviſions are ſtill continued in the parts wreſted from the natives by the Dutch; and the government of each of them is given to the civil and military officers who hold poſts in their vicinity.

The great diviſions of the iſland now are reduced to two; the one comprehending thoſe parts under the dominion of the Britiſh, and the other thoſe which ſtill remain to the natives. The Britiſh dominion, like a ring, completely encircles the territories of the king of Candy. Owing to the richneſs of the country around Columbo, and its ſize and population, that city has always been accounted the capital of the European dominions in the iſland; although in regard to all advantages to be derived from it with regard to foreign commerce, Trincomale is unqueſtionably of much ſuperior importance.

As the Britiſh territories in Ceylon ſkirt the coaſts quite round in a circle, the deſcription of them will follow the ſame direction, commencing with Columbo, the capital, and thence proceeding completely round the iſland.

[To be continued.]

On the EFFECTS *of* ELDER *in preſerving* PLANTS *from* INSECTS *and* FLIES. *By M.* Chriſtophe Gullet.

COMMON elder has appeared to me uſeful, 1ſt, for preventing cabbage plants from being devoured or damaged by caterpillars: 2d, to prevent blights, and their effects on fruit and other trees: 3d, to preſerve corn from yellow flies and other inſects: 4th, to ſecure turnips from the ravage of flies, &c.

1ſt, The ſtrong and fetid odour of a bunch of elder leaves induced me to think that different kinds of butterflies might be incommoded by it in proportion to their delicacy. I therefore took ſome young twigs of elder, at the period when butterflies began to appear, and whipped well with them ſome cabbage plants, but in ſuch a manner as not to damage them. Since that time, during two ſummers, though the butterflies hovered round the plants, I never ſaw one of them ſettle on them; and I do not think that a ſingle butterfly was hatched on the cabbages treated in this manner, though a neighbouring board was dirtied by them in the uſual manner.

2d, After a ſhort reflection on the effects here mentioned, and on blights, which in my opinion, are chiefly occaſioned by ſmall flies and ſmall inſects whoſe organs are ſtill more delicate than thoſe of the former. I was induced to whip in the ſame manner with elder twigs, as high as I could reach, the branches of a plum-tree which grew in an eſpalier. The whipped leaves remained green and

in a good condition, while from at leaſt ſix inches above to the top of the tree the reſt of the leaves were blighted, wrinkled, and full of worms. It is here to be obſerved that the tree was in full flower when I whipped it, therefore much too late for this operation, which ought to have been performed once or twice before flowering. But I am of opinion, that if trees were beſprinkled with a ſtrong infuſion of elder every eight or fifteen days, the ſucceſs would be certain, and that there would be no danger of injuring either the flowers or the fruit.

3d, What the farmers call the yellows in corn, and which they conſider as a kind of blight, is the effect, as every one knows, of a ſmall yellow fly with blue wings nearly of the ſize of a gnat. It lays its eggs in the ear of wheat, and produces a worm almoſt inviſible to the naked eye, but which, when ſeen by a magnifying glaſs, is a large yellow larva, having a ſhining colour of amber. This fly is ſo productive, that I have counted upward of forty worms in the chaff of one ear of wheat, which was a number ſufficient to deſtroy it entirely. I therefore propoſed to make my experiment as ſoon as poſſible; but the heat and drought of the ſeaſon having advanced the wheat more than uſual, it was in flower before I could attempt it. Next morning, however, at break of day, two ſervants having drawn bundles of elder over the ears of wheat on each ſide of the furrow, backward and forward, in places where the wheat was not ſo far advanced, I hoped that the fetid effluvia of the elder would prevent the flies from remaining on the ears that were covered with them: and, indeed, I was not entirely diſappointed; for, on examining my wheat ſome time after, I found that the part which had been beaten with elder was much leſs damaged than that which had not been treated in the ſame manner. I have no doubt, that, had I employed this precaution ſooner, the corn would have been completely preſerved. Should this be the caſe, the proceſs is ſimple; and I flatter myſelf that fine crops of corn may be ſaved by theſe means from this ſmall inſect, which is ſo deſtructive to them. One of theſe yellow flies laid on my thumb at leaſt eight or ten eggs, of an oblong form, in the ſmall interval of time which I employed in walking over two or three furrows, holding it by the wings, and which I could not obſerve without the aſſiſtance of a magnifying glaſs.

4th, It often happens that whole crops of turnips are deſtroyed while young, in conſequence of being pricked by certain inſects. I have great reaſon to think that this evil may be prevented in an effectual manner, by cauſing a perſon to draw a bunch of elder, ſufficiently large to cover about the breadth of a foot, over the young turnips, going backward and forward. What confirms me in this idea is, that having drawn a bunch of elder over a bed of young cauliflowers which had begun to be pricked, they afterward remained untouched by theſe inſects.

Another fact which tends to ſupport this idea is, that when my neighbourhood, about eight or nine years ago, was ſo infeſted with caterpillars they devoured all the vegetables, leaving ſcarcely a green leaf untouched, they ſpared the elder-trees amid this general devaſtation, and never moleſted them. In reflecting on theſe circumſtances, I am of opinion that the elder might be introduced with advantage into our gardens, as the means of preſerving fruit-trees and various plants from the rapacity of inſects.

The dwarf elder appears to me to exhale a much more fetid ſmell than the common elder, and therefore ought to be preferred in making experiments on this ſubject.

INVINCIBLE STANDARD.

Narrative *of the* Movements *of the* forty-ſecond *or* Royal Highland Regiment, *on the 21ſt of March* 1801.

ON the morning of the 21ſt of March, the piquets of the reſerve had given their fire and retired, when brigadier-general Oakes ordered the left wing of the 42d to advance. Major Stirling, who commanded this wing, had nearly gained the left of the redoubt, in which the 28th regiment had taken poſt, and were engaged, when he immediately encountered the enemy in front. They were at this time endeavouring to force the redoubt, the ruins, and the corps, which communicated from thence to the ſea. To the left of the major's poſition, the road from Alexandria to Aboukir paſſes through a conſiderable hollow, which ſeparated the 42d from the guards, a ſpace which was unoccupied by any troops in the firſt line. On this road the officers of the light company deſcried, and gave information of a column of the enemy directing its march upon their flank, and having with them a ſtandard and a field-piece.

The major himſelf ſoon after aſcertained this column to be French, and directed the officer commanding the light company to be ready to form front to his flank, in caſe any attempt ſhould be made to turn it.

The firing at this time was very ſmart, both in front and to the right. Paſſing by the rear, he had juſt reached the right of the wing he commanded, when he heard a diſcharge of grape; and on returning rapidly to the left, ſaw a French battalion in his rear, with a field-piece and ſix horſes, and two loaded camels behind them. Conceiving himſelf likely to be placed between two fires, he did not heſitate to order the wing to face to the right-about, and charge. The order was obeyed with a ſpirited promptneſs, which ſpeedily inſured the diſcomfiture of part of this corps, and obtained poſſeſſion of the gun.

The head of the enemy's column, followed by major Stirling, directed its movements on the ruins, and were now met by the right wing of the 42d, under lieutenant-colonel Alexander Stewart, who here joined in the conflict.

Thus preſſed, a part of the column ſought ſhelter in the ruins, which they entered, receiving the fire of ſome companies of the 58th regiment. The 42d at this time cloſed in with them, *and their ſtandard was taken from the bearer by major Stirling, who conſigned it in charge to a non-commiſſioned officer.* The ſurvivors of the enemy immediately ſurrendered, and were marched priſoners to the beach by enſign Hillas, of the 42d regiment.

Both wings of the 42d, now quitting the ruins, formed battalion under the orders of lieut. col. A. Stewart, and proceeded to the ground which the left wing had occupied at the commencement of the action on the left of the 28th redoubt. Along with the 28th, the regiment was now engaged in oppoſing the repeated attempts of the enemy to force the redoubt—attempts repeated alſo in the ſame manner, by freſh bodies endeavouring to come round its left, apparently to break the line of the 42d, and force the redoubt.

The column in front kept up a heavy fire, advancing at the ſame time; when ſir Ralph Abercromby coming up to the 42d, gave orders that the enemy ſhould not be allowed to gain the height. Orders were at that moment given by lieut. col. A. Stewart to charge, which was inſtantly done, and the French infantry were driven down the declivity to a conſiderable diſtance in front and left of the poſition of the reſerve. They retreated through the intervals of their cavalry, who were now obſerved, as the ſmoke cleared away, cloſe to the left of the 42d. The exertions of this

charge had diſordered the line; and lieutenant-colonel A. Stewart judging that the enemy's cavalry were preparing to charge in turn, ordered the 42d to form quickly on the grenadiers, and prepare to receive them. This moment was ſelected by the enemy for a deſperate charge. It was, doubtleſs, a moment in which a regiment preſſing cloſe on a retreating enemy cannot be ſuppoſed to be correctly in line. The charge of the cavalry was made *en maſſe*, and in ſome places penetrated the intervals which had been occaſioned by the movements to form on the grenadiers, an order which, in the continued firing of muſketry, could not be diſtinctly heard by the whole battalion.

The right was protected by the fire of the 28th in the redoubt, and brigadier general Stewart bringing up his brigade at this critical moment, his own regiment gave the enemy a cloſe and well-directed fire, which allowed time to the 42d to join their efforts to thoſe of the reſt of the reſerve, and of the foreign brigade, in repelling the cavalry.

This ſervice was ſpeedily accompliſhed with the effect ſtated in the diſpatches of the commander in chief. The reſt of the action conſiſted in ſharp ſhooting and cannonading, as ſtated in the ſame diſpatches.

The non-commiſſioned officer, ſerjeant Sinclair, to whom the ſtandard taken from the enemy was given in charge, was wounded in the rear of the regiment, and by him the ſtandard was loſt.

The 42d reflect, with great ſatisfaction, on the prompt and effective ſupport they received from the 28th regiment, the flank companies of the 40th regiment, the 58th regiment, and Queen's German regiment, with whom they more immediately acted.

The above narrative was drawn up from information, furniſhed by the officers concerned, and at their deſire. It has been ſubmitted to our inſpection, and we declare it conformable to our beſt obſervation and recollection of the facts.

(Signed) A. Stewart, major and lieut.-col. 42d R. H. reg.

(Signed) J. Stirling, major and lieut.-col. 42d R. H. reg.

Act *of* Mediation *made by the* First Conſul *of the* French Republic, *between the* Parties *which divide* Switzerland.

Bonaparte, Firſt Conſul of the Republic, Preſident of the Italian Republic, to the Swiſs.

HELVETIA, a prey to diſſentions, was menaced with diſſolution; it could not find in itſelf the means of renovation. The ancient affection of the French nation for this virtuous people, whom it had recently defended with its arms, and cauſed to be recognized as a power by its treaties; the intereſt of France, and of the Italian republic, the frontiers of which are covered by Switzerland, the demands of the ſenate, thoſe of the democratic cantons, and the wiſh of the maſs of the Helvetic people, have thrown upon us the duty of interpoſing our mediation between the parties which divide Switzerland. The ſenators Barthelemy, Rœderer, Fouche, and Demunier, have been by us charged to confer with fifty-ſix deputies of the Helvetic ſenate, and of the cities and cantons aſſembled at Paris, to determine whether Switzerland, federally conſtituted by nature, might be kept together by a central government, rather than by force, to diſcover the ſpecies of conſtitution which was moſt conformable to the wiſh of each canton, to diſtinguiſh what beſt anſwered the ideas which the new cantons had formed of liberty and happineſs, to conciliate in the old cantons the inſtitutions conſecrated by time, with the rights reſtored to the maſs of citizens: ſuch were the objects which were to be ſubmitted to examination and diſcuſſion. Their importance and their difficulty determined us to hear, ourſelves, ten deputies appointed by the two parties, namely, the citizens D'Affry, Glutz, Jauch, Monnot, Reinhart, Sprecher, Stapfer, Uſtery, Watteville, and Vonflue, and we have compared the reſult of their diſcuſſions, with the different projects preſented by the cantonal deputations, and with the reſults of the diſcuſſions which have taken place

between thoſe deputations and the ſenators commiſſioners. Having alſo employed every means of becoming acquainted with the intereſts and the evils of the Swiſs, we, in quality of mediator, without any other view than that of the happineſs of the people, on the intereſts of whom we have to pronounce, and without wiſhing to injure the independence of Switzerland, appoint as follows :—

[Then follows nineteen chapters, containing the organization of the different cantons of Switzerland, a ſeparate and diſtinct conſtitution being aſſigned to each.]

CHAP. XX.—FEDERAL ACT.

GENERAL DISPOSITIONS.

Art. 1. The 19 cantons of Switzerland, viz. Appenzell, Argovie, Bale, Berne, Fribourg, Glaris, Griſons, Lucerne, St. Gall, Schaffhauſen, Schwitz, Soleure, Teſſen, Thugovie, Underwald, Uri, Vaud, Zug, and Zurich, are to be federally united, according to the principles of their reſpective conſtitutions. They reciprocally guarantee thoſe conſtitutions, as well as their territories, liberty, and independence, either with a reference to foreign powers, or the uſurpation of any particular canton, or the conduct of factions.

2. The contingents, either in troops or money, which will be neceſſary for the due execution of thoſe guarantees, are to be furniſhed by the reſpective cantons in the following proportions;—

[Here follows the quota, &c. which it is propoſed each canton ſhall furniſh.]

3. There ſhall exiſt no longer in Switzerland, provincial ſubjects, nor any ſpecies of privilege, either local, hereditary, or appertaining to families.

4. Every Swiſs citizen ſhall have the liberty of removing his reſidence from one canton to another, and freely to exerciſe his induſtry in any: it is permitted him to acquire political rights in whatever canton he eſtabliſhes himſelf—but he ſhall not enjoy, at the ſame time, political rights in more than one canton.

5. The ancient laws of commerce, external or internal, are aboliſhed. The free exchange and circulation of commodities, cattle, merchandize, &c. are guaranteed.—All excluſive commercial privileges are aboliſhed in the interior of Switzerland. The cuſtoms, &c. payable on the frontiers, ſhall go to the treaſury of the adjoining canton, but the rates and proportions of theſe ſhall be ſubmitted for the approbation of the diet.

6. Each canton ſhall reſerve to itſelf the tolls deſtined for the repairs of the roads, keeping in order the banks of the rivers, bridges, &c.; but the rates of theſe ſhall, as in the foregoing inſtance, be left to the diſcretion of the diet.

7. The monies coined in Switzerland ſhall be of a uniform deſcription, which is alſo to be determined by the diet.

8. No canton ſhall afford aſylum to a criminal, legally convicted, nor even to one legally accuſed.

9. The number of ſtipendiary troops, to be ſupported by one canton, ſhall not exceed two hundred.

10. All partial alliances of one canton with another, or with any foreign power, is interdicted.

11. The government, or the legiſlative body of any canton, which ſhall violate a decree of the diet, is liable to be cited as rebellious, before a tribunal compoſed of the preſidents of the criminal tribunals of all the other cantons.

12. The cantons ſhall poſſeſs all thoſe powers which are not expreſſly delegated to them.

OF THE DIRECTORIAL CANTON.

13. The diet is to aſſemble by rotation, and at annual periods, at Fribourg—Berne—Soleure—Bale—Zurich—and Lucerne.

14. The cantons, of which the above cities are the chief places, ſhall in ſucceſſion become the directorial canton; the year for theſe purpoſes commences on the firſt of January.

15. The directorial canton ſhall provide ſuitable reſidence, and a guard of honour, for the deputies; it alſo ſupplies the expences of the ſeſſion.

16. The avoyer or burgomaſter of the directorial canton, ſhall unite to thoſe titles, that of landamman of Switzerland. He ſhall have cuſtody of the ſeal of the Helvetic republic. He cannot abſent himſelf from the city. The ſupreme council of his canton, ſhall accord to him an appropriate eſtabliſhment, and ſhall defray the extraordinary expence of his official functions.

17. The foreign miniſters are to preſent to the landamman their letters of credence, or of recall; and muſt apply to him on all matters of negociation.—He has alſo in charge the other diplomatic concerns.

18. At the opening of the diets, he is to communicate to them the neceſſary information reſpecting the domeſtic and foreign concerns of the republic.

19. No canton ſhall be allowed to call out or put in motion more than 500 mili-

na, until it ſhall have appriſed the landamman of Switzerland of ſuch intention.

20. In caſe of a revolt in the interior of any canton, or on any other preſſing occaſion, the troops of one canton may march into another canton: but this ſhall take place only on the requiſition of the ſupreme or petty council of the canton which wants ſuch aſſiſtance; and after taking the advice of the diet, however, is to be convoked after the ceſſation of hoſtilities, or if the danger continues.

21. If during the vacations of the diet, any diſagreement ſhould ariſe between any two or more cantons, they are to addreſs themſelves to the landamman of Switzerland, who, according to circumſtances, ſhall appoint conciliatory arbiters, or refer the caſe to the conſideration of the diet on its next ſitting.

22. He is to make known to the cantons every inſtance in which he deems their conduct likely to interrupt the tranquillity of Switzerland, and every thing which takes place of an irregular nature, and militating againſt either the federal act, or their particular conſtitution. He may, in ſome caſes, convoke the ſupreme council, or that of the lands-gemeindes, in thoſe places where the ſupreme authority is immediately exerciſed by the people.

23. The landamman of Switzerland ſends, in caſes of need, inſpectors, for the purpoſe of examining the ſtate of the roads, rivers, &c. Where neceſſity requires it, he can direct the immediate execution of public works, and make the neceſſary arrangements with reſpect to the expences thereof, &c.

24. His ſignature attaches a national credit and character to thoſe acts to which it is affixed.

OF THE DIET.

25. Each canton ſends a deputy to the diet, who may be accompanied by one or two ſubſtitutes, who ſhall be eligible to act as ſuch, in caſe of the abſence or indiſpoſition of the principal.

26. The deputies to the diet are to have inſtructions and limited powers—they cannot vote contrary to their inſtructions.

27. The landamman of Switzerland is, ex officio, deputy of the directorial canton.

28. The nineteen deputies who compoſe the diet, ſhall have twenty-five votes, in their deliberations, in manner as follows:—The deputies of thoſe cantons of which the population is more than 100,000 inhabitants, viz. thoſe of Berne, Zurich, Vaud, St. Gall, Argovie, and the Griſons, ſhall have each two votes. The deputies of thoſe cantons, which the population is leſs than 100,000 ſouls, namely, thoſe of Teſſen, Lucerne, Thurgovie, Fribourg, Appenzell, Soleure, Baſle, Schwitz, Glaris, Schaffhauſen, Underwald, Zug, and Uris, ſhall have but one vote each.

29. The diet, at which the landamman of Switzerland preſides, is to aſſemble the firſt Monday in June; its ſeſſion ſhall not exceed the term of one month.

30. There ſhall be extraordinary diets on the following occaſions:—On the demand of a neighbouring power, or of one of the cantons, ſupported by the ſupreme council of the directorial canton, which ſhall be aſſembled on ſuch occaſions, if not ſitting at the time. 2dly, On the determination of the ſupreme council, or of the lands-gemeindes of five cantons, who can, on ſuch an occaſion, demand the proceeding, though the directorial canton may not concur in it. 3dly, When they ſhall be convoked by the landamman of Switzerland.

31. The declarations of war, and the treaties of peace or of alliance, emanate from the diet; but the concurrence of three fourths of the cantons, on ſuch occaſions, is neceſſary.

32. It ſhall alone have the power of concluding treaties of commerce, &c. for the foreign ſervice. It authoriſes the cantons, in caſe it ſhall deem expedient, to treat particularly in other concerns with a foreign power.

33. There ſhall be no recruiting in any canton, for a foreign power, without conſent.

34. The diet has the direction of the contingent of the troops to be furniſhed by each canton, according to Art. 2. It appoints the commanding officer, and, in ſhort, adopts all the meaſures neceſſary for the ſecurity of Switzerland, and for the execution of the other diſpoſitions of the firſt article: this power alſo compriſes internal concerns.

35. It nominates and diſpatches Ambaſſadors extraordinary.

36. It decides finally upon all matters in diſpute between the canton. For this purpoſe it forms itſelf into a ſyndical, but in ſuch caſe each deputy has but one voice—neither are previous inſtructions neceſſary on this occaſion.

37. The verbal-proceſs of the diet is to be entered in two regiſters, of which one remains with the directorial canton; and the other with the ſtate ſeal, which, at the end of December, is to be removed to the chief place in the directorial canton, [illegible]

38. A chancellor, and a greffier, appointed by the diet, for two years, and paid by the directorial canton (at the rate the diet ſhall think proper), ſhall always accompany the ſtate ſeal and the regiſters.

39. The conſtitution of each canton, engroſſed on parchment, and ſealed with the ſeal of the canton, ſhall be depoſited in the archives of the diet.

40. The preſent federal act, as well as thoſe of the particular conſtitutions of the 19 cantons, ſhall abrogate and annul all anterior diſpoſitions whatever, that may be contrary to it; and no law relative to the internal affairs of the cantons, or the relations between them, can be founded on the ancient political ſtate of Switzerland.

The repoſe of Switzerland, the ſucceſs of the new inſtitutions now forming, require that the neceſſary operations for carrying them into effect, and to tranſmit to the new magiſtrates the care of the public happineſs and welfare, be ſecured from the influence of the paſſions, and executed with moderation, impartiality, and wiſdom.

We cannot hope for a proſperous iſſue, unleſs the commiſſioners, named by the act of mediation, be animated by the ſpirit which dictated it.

By theſe conſiderations we, in our ſaid quality, and with the reſervations before expreſſed, do conſtitute as follows:

1. For the year 1803, Fribourg to be the directorial canton.

2. The citizen Louis D'Affry to be landamman of Switzerland, for the ſaid year, and inveſt him with the extraordinary powers until the aſſembling of the diet.

3. The original act of mediation ſhall be tranſmitted to the landamman, in order to be depoſited in the archives of the directorial canton.

4. In each canton a commiſſion of ſeven members, and of which one ſhall be appointed by us, and ſix choſen by the ten deputies ſelected to confer with us, is charged to put into activity the conſtitution, and to adminiſter it proviſionally.

5. Theſe commiſſions are compoſed as follows:

[Then follow the names of the perſons appointed to fill the commiſſions of the different cantons.]

6. On the 10th of March next, the central government ſhall diſſolve itſelf, after having tranſmitted its papers and archives to the landamman of Switzerland.

7. Each commiſſion ſhall aſſemble on the 30th of March, at the chief place of the canton, and notify its aſſembling immediately to the prefect.

8. Within twenty-four hours after that notification, the prefect ſhall tranſmit to the commiſſion the papers of adminiſtration.

9. In thoſe caſes which may require inſtructions, or ſpecial authorities, the commiſſions ſhall addreſs themſelves to the landamman of Switzerland.

10. On the 15th of April the conſtitution ſhall be put into a ſtate of activity, in order that on the 1ſt of June each canton may elect its deputies to the diet, and prepare their inſtructions, and on the firſt Monday in July, in the preſent year, the diet ſhall aſſemble.

11. The affairs pending before the ſupreme tribunal ſhall be carried to the tribunal of appeal of the canton in which the parties reſide. The ſupreme tribunal ſhall ceaſe all its functions on the 10th of March.

12. The Helvetic troops, at preſent in the pay of Switzerland, who ſhall not be employed by the 1ſt of May, by the cantons, ſhall be taken into the ſervice of France.

13. No proſecution ſhall be carried on for crimes relating to the revolution, committed, or pretended to be committed, either by individuals, or in the exerciſe of any public function.

The diſſolution of the central government, and the reinſtatement of the ſovereignty in the cantons, requires that there ſhould be a proviſion made for the diſcharge of the Helvetic debts, and of the diſpoſal of the property declared national.

We, in our ſaid quality, and with the reſerve before expreſſed, appoint as follows—

Art. 1. The property heretofore belonging to the convents, ſhall be reſtored to them, not only the property ſituated in the ſame canton, but alſo in any other.

2. The adminiſtration of national property, other than that heretofore belonging to Berne, in the cantons of Vaud and Argovia, is proviſorily tranſmitted to the cantons to which it belonged. The documents reſpecting the claims of Berne, ſhall be proviſorily tranſmitted to thoſe commiſſioners appointed by the cantons of Berne, Vaud, and Argovia.

3. In each canton, burthened with debts anterior to the revolution, there ſhall be aſſigned funds for their funding or diſcharge, out of what remains of the property heretofore belonging to the canton.

4. There ſhall be re-conſtituted for each

city a revenue proportioned to its municipal expences.

5. The national debt ſhall be liquidated, to which purpoſe all claims ſhall be appropriated. If the debt exceeds the amount of the credit, the exceſs ſhall be divided among the cantons, in a proportion according to what remains of their ci-devant immoveable property, after the diſcharge of the cantonal debts anterior to the revolution, and the recompoſition of the patrimony of the cities.

6. The moveable and immoveable property which ſhall remain after the formation of the communal funds, the diſcharge of the cantonal and national debts, ſhall return to the poſſeſſion of thoſe cantons to which it had belonged.—The property which ſhall remain in the cantons of Vaud and Argovia, ſhall belong to them. What may remain of the claims of Berne, ſhall be equally diſtributed among the cantons of Berne, Vaud, and Argovia.

7. A commiſſion compoſed of five members, namely, the citizens Stapfer, miniſter of the republic; Kneſter, ex-miniſter of the finances; Raemy, ci-devant chancellor of Fribourg, and at preſent member of the adminiſtrative chamber; Sutzer, of Winterthur, Helvetic deputy; Laurent, mayor of Lucerne, preſident of the adminiſtrative chamber, ſhall determine the extent of the wants of the municipalities, and of the funds neceſſary for reconſtituting their revenues, ſhall liquidate the debts of the canton and the national debt, ſhall aſſign to each debt the funds neceſſary to operate its diſcharge, and ſhall determine the property which ſhall return into the poſſeſſion of each canton.

8. It ſhall publiſh the reſult of its labours with reſpect to the debts on the 10th of May, and with reſpect to the revenues of the cities, and the patrimony of the cantons, on the 10th of June: it ſhall ſend the reſult of each labour to the firſt landamman of Switzerland, and to each canton, for the purpoſe of being carried into execution.

9. The commiſſion ſhall aſſemble at the chief place of the directorial canton, and ſhall remain there till the end of its labours.

The preſent act, the reſult of long conferences between wiſe men and the friends of virtue, appear to us to contain thoſe diſpoſitions which are moſt proper to enſure the peace and happineſs of Switzerland.—As ſoon as they ſhall be executed, the French troops ſhall be withdrawn.

We recogniſe Helvetia, conſtituted conformably to the preſent act, as an independent power.

We guarantee the federal conſtitution and that of each canton, againſt the enemies of the tranquillity of Helvetia, whoſoever they may be, and we promiſe to continue thoſe relations of beneficence which for ſo many ages have united the two nations.

Made and done at Paris, 19th Feb. 1803.

(Signed) BONAPARTE.

The Secretary of State,
(Signed) HUGUES B. MARET.

The Miniſter for Foreign Affairs,
(Signed) C. M. TALLEYRAND.

The Miniſter for Foreign Affairs, of the Italian Republic,
(Signed) J. MARESCALCHI.

The preſent act has been tranſmitted by the ſenators commiſſioners underſigned, to the ten Swiſs deputies underſigned, at Paris, the 19th of Feb. 1803.

(Signed)	(Signed)
BARTHELEMY.	LOUIS D'AFFRY.
RŒDERER.	PIERRE GLUTZ.
FOUCHE.	EMMANUEL JAUCH.
DEMEUNIER.	H. MONNOT.
	REINHARD.
	SPRECHER BERNYS.
	P. A. STAPFER.
	PAUL USTERRY.
	R. DE WATTEVILLE, de Montbenay.
	Y. VON FLUE.

REVIEW OF THE SITUATION OF THE FRENCH REPUBLIC.

Paris, Feb. 21, Year 11.

EVENTS have not diſappointed the wiſhes and efforts of government. The legiſlative body, at the moment of reſuming its labours, finds the republic ſtronger by the union of its citizens, more active in its induſtry, and more confident in its proſperity.

The execution of the concordat, on which the enemies of public order had ſtill reſted their criminal hopes, has been every where productive of the moſt happy effects. The principles of an enlightened religion, the voice of the ſovereign pontiff, and the firmneſs of government, have triumphed over every obſtacle. Mutual ſacrifices have united the miniſters of religion. The Galican church revives by means of intelligence and unanimity, and a happy change is already manifeſt in the public manners. Opinions and the dictates of the heart approximate; children become again more atten-

tive to the voice of parents; the youth more ſubmiſſive to the authority of the magiſtrates; the conſcription proceeds effectually in places where the name of conſcription alone uſed to excite a ſpirit of reſiſtance; and devotion to the ſervice of the country is a part of religion.

The chief conſul has obſerved every where, in the departments which he has viſited, proofs of this return to the principles which conſtitute the ſtrength and happineſs of ſociety. In the departments of Eure, of Lower Seine, of Oiſe, they are proud of the national glory; they feel throughout their whole extent the advantages of equality; they bleſs the return of peace; they bleſs the re-eſtabliſhment of public worſhip. All theſe bonds have linked their hearts to the conſtitution and the ſtate. It is the duty of government to promote and attend to theſe happy diſpoſitions.

The other forms of religion are organiſing, and the conſiſtories are compoſed of enlightened citizens, known defenders of public order, of civil and religious liberty.

Public inſtruction, that eſſential prop of ſociety, is every where called for with eagerneſs. Already have many academies been opened; already, as the government foreſaw, has a number of private ſchools attained the rank of ſchools of the ſecond order. All the citizens are ſenſible that there can be no happineſs without knowledge; that without talents and information there can be no equality but of miſery and ſlavery.

A military ſchool is prepared for the youthful defenders of their country. As ſoldiers, they will learn to live in camps, and to endure the fatigues of war. They will be formed by long obedience to the art of commanding, and they will carry to the armies ſtrength and diſcipline, united with knowledge and talents.

In the academies, as in the military ſchools, the youth of the departments lately incorporated with the republic ſhall live promiſcuouſly with the youth of ancient France. From the blending of ſentiments and manners, from the communication of habits and characters, from the intermixture of intereſts, ambitions, and proſpects, will ſpring that fraternity which of many nations will make an individual people, deſtined by its poſition, its courage, and its virtues, to be the connecting bond and the example of Europe.

The national inſtitute, which has its power over the ſyſtem of public inſtruction, has received a more uſeful direction, and it will henceforward diſplay a more active influence on the character of the nation, on the language, on the ſciences, on letters, and on the arts.

To enſure the ſtability of our riſing inſtitutions, to remove from the eyes of the citizens that frightful picture of diſorder which ſtill accompanied the periodical return of elections to the ſupreme magiſtracy, the friends of the country called the firſt conſul to the ſupreme magiſtracy for life. The people accepted the propoſal, and the ſenate has proclaimed the will of the people.

The ſyſtem of liſts of eligibility could not ſtand the teſt of experience and the force of public opinion. The organiſation of the ſenate was incomplete. The national juſtice was diſtributed among the tribunals without harmony or mutual dependance; there was no authority to protect or to reform them, no bond of ſubjection to a common diſcipline. In fine, France wanted a power which even juſtice itſelf required, that of granting pardon. How often during the laſt twelve years has it been invoked! How many unfortunate beings had fallen victims to an inflexibility, of which the ſages accuſed our laws! How many guilty perſons had been acquitted by a pernicious lenity, becauſe the laws were too ſevere!

A ſenatus conſultum has reſtored to the people the exerciſe of the rights which the conſtituent aſſembly had recogniſed; but it has reſtored them to it enveloped in precautions which guard it from error or precipitancy in its choice, which ſecure the influence of propriety and the aſcendancy of enlightened wiſdom.

Should the offices of the ſupreme magiſtracy become vacant, the duties and the line of conduct of the ſenate are defined; determined forms guarantee the wiſdom and the freedom of the choice; and the expedition of the elective leaves neither to ambition the means of conſpiracy, nor to anarchy the opportunity of ſubverting it. The cement of time will every day conſolidate this tutelary inſtitution. It will be the limit of every anxiety, and the end of every hope, as well as it is the nobleſt reward promiſed to public ſervices and virtues.

Juſtice embraces all the tribunals with one common bond; they have their ſubordination and their check; ever free in the exerciſe of their functions, always independent of power, never of the laws.

The right of pardoning, when the intereſt of the republic demands it, or when circumſtances call for lenity, is committed to the firſt magiſtrate, but not without the ſalutary check of juſtice itſelf. He cannot

exerciſe it but in preſence of a council, and after having conſulted the moſt rigid ordinances of the law.

If inſtitutions are to be judged of by their effects, never has inſtitution produced a more important reſult than the organic ſenatus conſultum. From that moment the French people began to confide in their deſtiny, property regained its former value, and diſtant ſpeculations multiplied. Heretofore every thing ſtill ſeemed fluctuating; people made the moſt of the preſent, they doubted of the future, and the enemies of the country ever cheriſhed hopes. Since that period there remain to them but impotence and hatred.

The iſland of Elba had been ceded to France; it gave it a mild induſtrious people, two noble ports, and a valuable mine: but being ſeparated from France, it could not be intimately attached to any of its departments, nor ſubjected to one common ſyſtem of adminiſtration. Principles have been made to yield to the neceſſity of the caſe; and exceptions, conformable to its poſition, and the public intereſt, have been made for the iſle of Elba.

The abdication of the ſovereign, the wiſh of the people, and exiſting circumſtances, had placed Piedmont in the power of France. Amid the nations that ſurrounded it, and with the materials that compoſed its population, Piedmont neither could maintain its own independence, nor the expence of a monarchy. United with France, it will enjoy ſecurity and ſplendour; its laborious and enlightened citizens will extend their induſtry and talents in the midſt of the arts and of peace.

A calm ſecurity prevails in the interior of France. The vigilance of the magiſtrates, a rigid execution of juſtice, a gendarmerie vigorouſly conſtituted, and directed by a chief grown old in the career of honour, have ſtruck terror every where into the brigands.

Private intereſt had produced a ſcene of public intereſt. The citizens have ventured to attack thoſe whom formerly they contemplated with fear even when in chains at the tribunals of juſtice. Whole communes have taken up arms, and have deſtroyed them. Strangers envy the ſecurity of our roads, and that public energy which, often inviſible, but ever preſent, watches their footſteps, and protects them without an application.

In the courſe of a year of difficulty, in the midſt of a general ſcarcity, the poor never abandoned their confidence in the cares of government; they ſupported the neceſſary privations with reſolution; and with gratitude received the aſſiſtance which they had the prudence to wait for.

The crime of forgery is no longer encouraged by the hope of impunity. The zeal of the tribunals appointed to take cognizance of it, and the juſt ſeverity of the laws, have at length arreſted the progreſs of this ſcourge, which threatened the public fortune, and the properties of individuals, with ruin.

Our agriculture advances in improvement, and challenges the moſt boaſted ſyſtems of Europe.—Throughout all the departments there are intelligent cultivators, who give leſſons and examples.

The breeding of horſes has been encouraged by premiums; the improvement of wool, by the introduction of foreign ſheep. Zealous adminiſtrators every where inveſtigate and make known the riches of our ſoil, and diſſeminate uſeful proceſſes and the happy reſults of experience.

Our manufacturers multiply, revive, and extend themſelves; already rivalling each other, they will ſoon, no doubt, rival the moſt celebrated foreign manufactures.—Nothing is now wanting to their proſperity, but capital procured on better terms. Capital begins already to be withdrawn from hazardous ſpeculations in the ſtocks, and is returning to the land and to uſeful enterpriſes. More than twenty thouſand French manufacturers, that had been diſperſed throughout Europe, have been recalled by the kindneſs and bounty of the government, and are to be reſtored to our manufactures.

Among our manufactures, there is one above the reſt peculiar to France, which the genius of Colbert had created.—It had been buried under the ruins of Lyons; but the government has taken care to recover it.—Lyons revives with ſplendour and opulence, and its manufacturers already in the receſſes of their workſhops, lay a tax upon the luxury of Europe. But the principle of their ſucceſs is in the luxury of France itſelf.—The fickleneſs of our taſte, and the inconſtancy of our faſhions, muſt ſupply aliment to the luxury of other countries; this is what affords employment and ſupport to an immenſe population, which otherwiſe would periſh in corruption and miſery.

There will be inſtituted at Compiegny, as alſo in a ſhort time on the borders of La Vendee, eſtabliſhments, in which young men will be formed to induſtry and the mechanical arts. Thence will our dock-yards and manufactures draw the managers of their workſhops and labours.

Fourteen millions produced by the bar-

rier tax, and ten millions extraordinary, have been, during the year 10, expended on the public roads. The former ways have been repaired and kept up. New communications have been opened. The roads through the Simplon, Mount Cenis, and Mount Geneve, will ſoon afford a triple and eaſy acceſs to Italy. A road is marked out from St. Eſprit to Gap; another from Rennes to Breſt by Pontivy. There are works going on at Pontivy, that will have a great influence on the public ſpirit of the departments into which ancient Bretagne is divided; a canal will convey commerce and a new ſource of proſperity thither.

A neceſſary road from Bingen to Coblentz is marked out through the inacceſſible rocks on the banks of the Rhine. The neighbouring communes add their exertions to the ſacrifices from the public treaſury: and the inhabitants of the oppoſite bank, who laughed at the folly of the attempt, are aſtoniſhed at the rapidity with which it is executed.

A number of workſhops are diſtributed along the canal of St. Quintin. The canal of the Ourcq has been opened, and in a ſhort time Paris will enjoy the benefit of its waters, and the ſalubrity and embelliſhments which they promiſe to afford. The canal deſigned to unite the navigation of the Seine, the Saone, the Doubs, and the Rhine, is almoſt executed as far as Dole; and the public treaſure already receives, in the increaſe of the price of the timber which this canal carries to a market, a ſum equal to that which it has advanced to continue the work. The canals of Aigues-Mortes, and the Rhine, and the draining of the moraſſes of the Lower Charante, are commenced, and will open new ways to commerce, and give new lands to cultivation.—Active exertions are made in repairing the embankments of the iſle of Gatſand, thoſe of Oſtend, thoſe of the Cotes du Nord, and reeſtabliſhing the navigation of our rivers. This navigation is no longer abandoned to the care of the government alone; the owners of the boats that frequent it have at length felt that it is their patrimony, and they deſire that the taxes, by which it is to be preſerved, ſhall henceforth be levied on themſelves.—On the ſhores of the ocean, forts are erected to cover the road of the iſle of Aix, and to defend the ſhips of the republic. Funds are every where appropriated for cleanſing and repairing our ports.—A new baſon, with a ſluice, will complete the works of the port of Havre, and make the fineſt commercial harbour on the channel.—A company of pilots is forming, for the purpoſe of ſecuring the navigation of the Scheldt, and freeing it from the knowledge and the danger of foreign pilots.—At Antwerp, the labours which are calculated to reſtore its commerce to its ancient celebrity, are about to commence; and, in the opinion of the government, theſe are the channels which will unite the navigation of the Scheldt, the Meuſe, and the Rhine; ſupply our dock-yards and our neceſſities with the timber which grows on our ſoil; and afford to our manufacturers a conſumption, which thoſe of foreign countries at preſent diſpute with them, even in our own territory.

The iſlands of Martinique, Tobago, and St. Lucia, have been reſtored to us, with every thing annexed to them that is calculated to render them proſperous. Guadaloupe, reconquered and tranquilliſed, revives to cultivation.

Guiana is getting out of its long infancy, and the progreſs of its growth is ſtriking. St. Domingo has ſubmitted, and the author of its troubles was in the power of France; every thing, in ſhort, announced the return of its proſperity, when, by a horrid diſeaſe, it was devoted to renewed calamity; but the plague which deſolated our army has at length ceaſed its ravages, and the forces which remain in the colony, together with thoſe which arrive from all our ports, cannot fail to reſtore it to peace and commerce. Already veſſels depart for the iſles of France and Reunion, and for India. Our maritime commerce retraces the veſtiges of its ancient connections, forms new ones, and acquire hardihood by trial. Already fortunate experiments and wiſe protection have reanimated the preparations for the fiſhery, which was, for a long time, the patrimony of the French. Commercial expeditions, of a more important nature, are made and meditated for the weſtern colonies, for the iſle of France, and for India.

Marſeilles is reſuming its ancient aſcendency on the Mediterranean: chambers of commerce have been reeſtabliſhed in the towns that had them formerly, and erected in thoſe that by the extent of their operations and the importance of their manufactures appeared to merit them. In theſe aſſociations, formed by honourable ſelections, the ſpirit and ſcience of commerce will revive: in them its intereſts, always inſeparable from thoſe of the ſtate,

will be developed: in them the merchant will learn to prefer to riches the prudence which does honour to them; and to the enjoyment of a vain luxury, that ſage economy which fixes the eſteem of the citizen and the confidence of the ſtranger. Deputies choſen from theſe different chambers ſhall diſcuſs under the eyes of the government the intereſt of our commerce and our manufactures, and the laws and regulations which circumſtances may require.

Among our land and ſea forces, inſtruction and the love of diſcipline are ſpreading very faſt. The accounts are become more pure in the military corps; a domeſtic adminiſtration has ſucceeded to the dilapidating ſyſtem of contractors: the ſoldier, better fed, and better clothed, begins to underſtand economy, and the ſavings which he puts in the common cheſt, attach him to his colours as to his family.

All the ſources of our revenue are become more productive. The collection of the direct contributions are leſs rigorous on thoſe who are ſubject to them. In the year 6, there were counted diſtreſſes to the amount of fifty millions, and the collection was three or four years in arrear; at preſent they reckon only three millions in that ſtate, and the collection is up to the day. Every branch, every office, affords a conſtantly increaſing produce. The regiſter office is fruitful to a degree which bears teſtimony of the rapid circulation of capital, and the multiplicity of tranſactions. In the midſt of ſo many ſigns of proſperity, complaints are yet made of the exceſs of direct contributions. The government, with the aſſiſtance of all the enlightened men concerned in the collection, have diſcovered that the ſurcharge ariſes principally from the inequality of the diſtribution. Meaſures have been decreed, and are already in a ſtate of execution, in order to aſcertain the real inequalities which exiſt between the different departments. In the courſe of the year 12 at the lateſt, regular and ſimultaneous operations will have informed us what is the relative ſtate of the contributions between department and department, and what is the middle rate of the tax on real property in each department. The government, once aſſured of a certain reſult, will propoſe the rectifications which juſtice calls for; but even in the preſent ſeſſion, and without waiting for theſe reſults, it will propoſe an important diminution in the contribution on real property.

Still further innovations are propoſed in our ſyſtem of finance, but every change is an evil unleſs it be clearly demonſtrated that certain advantages muſt reſult from it. The government will expect from time, and the moſt profound diſcuſſions, the maturity of theſe projects which are frequently hazarded by inexperience; which are ſupported on the example of an antiquity, the traces of which are to moſt minds already effaced; and on the financial doctrine of a nation, which has, by its exaggerated efforts, broken through all meaſures of taxation and public expenditure, with an incredible increaſe of revenue. Extraordinary circumſtances have produced neceſſities, which it was not given to us to foreſee. It was neceſſary for us to reconquer two of our colonies, and to reeſtabliſh in all of them the power and the government of the mother country. It was neceſſary, by means ſudden, and too much extended, to be directed with the preciſion of a ſtrict economy, to ſecure a ſubſiſtance to the capital, and to a great number of departments: but, at leaſt, the efforts of the government have been attended with ſucceſs: and from theſe vaſt operations, there remain reſources to guarantee the capital henceforth from the return of the ſame ſcarcity, and to laugh at the combinations of the monopoliſts.

In the account of the miniſter of finance will be found the total of the annual contributions, and the amount of the different branches of the public revenue; what they have produced in the year that has expired, and what is expected from the amelioration, as well of the meaſures of the adminiſtration, as from the progreſs of the public proſperity; what have been the elements of the expences of the year 10, in the different departments of the miniſtry; what ſums are yet to be paid for this and prior years; what reſources remain to cover them, as well in the enforcement of arrears, as in the extraordinary funds that had been aſſigned for the ſervices of theſe years, and which have not been yet conſumed; what is the actual ſtate of the public debt; what have been its increaſes; what natural extinctions have taken place in it; and what extinctions have been effected by the ſinking fund. In the account of the miniſter of the public treaſure, will be ſeen, in their real ſtate, the receipts and payments effected in the year 10: that part of them that belongs to the different branches of the public income; that which ſhould be

placed to each year, and to each part of the public ſervice.

From the united accounts of theſe two miniſters will reſult the moſt complete picture of our financial ſituation. The government preſents it with equal confidence to its friends and to its detractors, to citizens and to ſtrangers. After having authoriſed the expences foreſeen for the year 12, and appropriated the neceſſary funds to theſe expences, objects of the greateſt intereſt will occupy the ſeſſion of the legiſlative body. It is neceſſary to reeſtabliſh order in our money ſyſtem; it is neceſſary to give our cuſtom a new force and a new energy, for the ſuppreſſion of ſmuggling: it is neceſſary, in fine, to give to France the civil code ſo long promiſed and ſo long expected. On all theſe matters, projects of laws have been formed under the eyes of government, and matured in conferences, to which the committees of the council of ſtate, and of the tribunate, brought nothing but the love of truth and a feeling for the public intereſt. The ſame feeling and the ſame principles will direct the deliberation of the legiſlators, and guarantee to the republic the wiſdom and impartiality of the laws which they ſhall adopt.

On the continent, every thing preſents to us pledges of repoſe and of tranquillity. The Italian republic, ſince the comitia of Lyons, has been fortifying itſelf by the more intimate union of the people that compoſe it. The happy concord of the authorities which govern it, its interior adminiſtration, and its military force, have already given it the character and attitude of a ſtate long ſince formed; and if wiſdom preſerves them, they guarantee to it a deſtiny every way encreaſing in proſperity.

Liguria, placed under a mixed conſtitution, beholds at its head, and in the boſom of its authorities, all the citizens it has moſt commendable for their virtues, their knowledge, and their fortunes.

New ſhocks have agitated the Helvetic republic. The government owed its aſſiſtance to neighbours whoſe repoſe was material to its own repoſe, and it will do every thing to ſecure the ſucceſs of its mediation, and the happineſs of a people whoſe poſitions, whoſe habits, and whoſe intereſts, render it of neceſſity the ally of France.

Batavia is gradually gaining poſſeſſion of the colonies preſerved to her by the peace. She will always remember, that France can only be to her the moſt uſeful friend or the moſt dangerous enemy.

In Germany, the laſt ſtipulations of the treaty of Luneville are near their completion.

Pruſſia, Bavaria, and all the ſecular princes, who had poſſeſſions on the left bank of the Rhine, are obtaining on the oppoſite bank adequate indemnification.

The houſe of Auſtria finds in the biſhoprics of Saltzbourg, Aichſtett, Trent, and Brixen, and in the greater part of that of Paſſau, more than what it loſt in Tuſcany.

Thus, by the happy concurrence of France and Ruſſia, all the permanent intereſts are reconciled; and from the midſt of that ſtorm which appeared to be pregnant with deſtruction, the Germanic empire, that empire ſo neceſſary to the equilibrium and the repoſe of Europe, ariſes with greater ſtrength, by being compoſed of elements more homogenous, better combined, and more adapted to the circumſtances and ideas of the preſent age.

A French ambaſſador is at Conſtantinople, authoriſed to ſtrengthen the ties that attach us to a power which ſeems to totter, but which it is our intereſt to ſupport and replace on its foundation.

Britiſh troops are ſtill in Alexandria and Malta; the government had a right to have complained, but it learns that the veſſels that are to convey them to Europe are in the Mediterranean.

The government guarantees to the nation the peace of the continent; and it is permitted to it to hope for the continuation of the maritime peace. That peace is the deſire and the wiſh of every nation, to preſerve it the government will do all that is compatible with the national honour, eſſentially reſtrained to the ſtrict execution of treaties.

But in England two parties diſpute the power—the one has concluded peace, and appears determined to maintain it, the other has ſworn an implacable hatred to France. Hence that fluctuation in their opinions and councils, and that attitude at once pacific and threatening.

While this ſtruggle of parties ſhall laſt, there are meaſures which prudence commands to the government of the republic. Five hundred thouſand men ought to be, and ſhall be ready to defend and avenge her. Strange neceſſity, which the influence of miſerable paſſions impoſe on two nations, whom intereſt and a mutual wiſh attach to peace!

Whatever may be at London the ſucceſs of intrigue, it will never force other nations into new leagues; and the go-

vernment aſſerts, with a juſt pride, that, alone, England cannot now contend with France.

But we have better hopes, and we believe rather that the councils of wiſdom and the voice of humanity will be only attended to in the Britannic cabinet.

Yes! doubtleſs, peace will every day more conſolidate itſelf; the relations of the two governments will aſſume that character of benevolence which is conformable to their mutual intereſts; a happy repoſe will bury in oblivion the long calamities of a diſaſtrous war; and France and England, in founding their reciprocal happineſs, will merit the gratitude of the whole world.

(Signed)

The firſt conſul, BONAPARTE.

By the firſt conſul,

The ſecretary of ſtate, H. B. MARET.

AMERICA.

Congreſs, December 13.

THE following meſſage was delivered to each houſe by Mr. Lewis, ſecretary to the preſident:

To the Senate and Houſe of Repreſentatives of the United States.

WHEN we aſſemble together, fellow-citizens, to conſider the ſtate of our beloved country, our juſt attentions are firſt drawn to thoſe pleaſing circumſtances which mark the goodneſs of that Being from whoſe favour they flow; and the large meaſure of thankfulneſs we owe for his bounty. Another year has come around, and finds us ſtill bleſſed with peace and friendſhip abroad; law, order, and religion at home; good affection and harmony with our Indian neighbours; our burdens lightened, yet our income ſufficient for the public wants, and the produce of the year great beyond example. Theſe, fellow-citizens, are the circumſtances under which we meet; and we remark, with ſpecial ſatisfaction, thoſe which, under the ſmiles of Providence, reſult from the ſkill, induſtry, and order of our citizens, managing their own affairs in their own way, and for their own uſe, unembarraſſed by too much regulation, unoppreſſed by fiſcal exactions.

On the reſtoration of peace in Europe, that portion of the carrying trade which had fallen to our ſhare during the war, was abridged by the returning competition of the belligerent powers. This was to be expected, and was juſt.—But, in addition, we find, in ſome parts of Europe, monopolizing diſcriminations, which, in the form of duties, tend effectually to prohibit the carrying thither our own produce in our own veſſels. From exiſting amities, and a ſpirit of juſtice, it is hoped that friendly diſcuſſion will produce a fair and adequate reciprocity. But ſhould falſe calculations of intereſt defeat our hope, it reſts with the legiſlature to decide whether they will meet inequalities abroad with countervailing inequalities at home, or provide for the evil in any other way.

It is with ſatisfaction I lay before you an act of the Britiſh parliament, anticipating this ſubject, ſo far as to authoriſe a mutual abolition of the duties, and countervailing duties, permitted under the treaty of 1794. It ſhows, on their part, a ſpirit of juſtice and friendly accommodation, which it is our duty and intereſt, to cultivate with all nations. Whether this would produce a due equality in the navigation between the two countries, is a ſubject for your conſideration.

Another circumſtance which claims attention, as directly affecting the very ſource of our navigation, is the defect, or the evaſion, of the law providing for the return of ſeamen, and particularly of thoſe belonging to veſſels ſold abroad. Numbers of them, diſcharged in foreign ports, have been thrown on the hands of our conſuls, who, to reſcue them from the dangers into which their diſtreſſes might plunge them, and ſave them to their country, have found it neceſſary, in ſome caſes, to return them at the public charge.

The ceſſion of the Spaniſh province of Louiſiana to France, which took place in the courſe of the late war, will, if carried into effect, make a change in the aſpect of our foreign relations, which will, doubtleſs, have juſt weight in any deliberations of the legiſlature connected with that ſubject.

There was reaſon, not long ſince, to apprehend that the warfare in which we were engaged with Tripoli, might be taken up by ſome other of the Barbary powers. A reinforcement, therefore, was immediately ordered to the veſſels already there.—Subſequent information, however, has removed theſe apprehenſions for the preſent. To ſecure our commerce in that ſea, with the ſmalleſt force competent, we

have ſuppoſed it beſt to watch ſtrictly the harbour of Tripoli. Still, however, the ſhallowneſs of their coaſt, and the want of ſmaller veſſels on our part, has permitted ſome cruizers to eſcape unobſerved; and to one of theſe an American veſſel unfortunately fell a prey. The captain, one American ſeaman, and two others of colour, remain priſoners with them, unleſs changed under an agreement formerly made with the baſhaw, to whom, on the faith of that, ſome of his captive ſubjects had been reſtored.

The convention with the ſtate of Georgia has been ratified by their legiſlature, and a repurchaſe from the Creeks has been conſequently made, of a part of the Tallaſſee county. In this purchaſe has been alſo comprehended a part of the lands within the fork of Oconee and Oakmulgee rivers. The particulars of the contract will be laid before congreſs as ſoon as they ſhall be in a ſtate for communication.

In order to remove every ground of difference poſſible with our Indian neighbours, I have proceeded in the work of ſettling with them, and marking the boundaries between us. That with the Choctaw nation is fixed in one part, and will be through the whole within a ſhort time. The country to which their title had been extinguiſhed before the revolution is ſufficient to receive a very reſpectable population, which congreſs will probably ſee the expediency of encouraging, as ſoon as the limits ſhall be declared. We are to view this poſition as an outpoſt of the United States, ſurrounded by ſtrong neighbours, and diſtant from its ſupport. And how far that monopoly, which prevents population, ſhould here be guarded againſt, and actual habitation made a condition of the continuance of title, will be for your conſideration. A prompt ſettlement too, of all exiſting rights and claims within this territory, preſents itſelf as a preliminary operation.

In that part of the Indian territory which includes Vincennes, the lines ſettled with the neighbouring tribes fix the extinction of their title at a breadth of twenty-four leagues from eaſt to weſt, and about the ſame length parallel with and including the Wabaſh. They have alſo ceded a track of four miles ſquare, including the ſalt ſprings near the mouth of that river.

In the department of finance, it is with pleaſure I inform you that the receipts of external duties, for the laſt twelve months, have exceeded thoſe of any former year, and that the ratio of increaſe has alſo been greater than uſual. This has enabled us to anſwer all the regular exigencies of government, to pay from the treaſury, within one year, upward of eight millions of dollars, principal and intereſt of the public debt, excluſive of upward of one million paid by the ſale of bank ſtock, and making in the whole a reduction of nearly five millions and a half of principal, and to have now in the treaſury four millions and a half of dollars, which are in a courſe of application to the further diſcharge of debt and current demands. Experience, too, ſo far authoriſes us to believe, if no extraordinary event ſupervenes, and the expences which will be actually incurred ſhall not be greater than were contemplated by congreſs at their laſt ſeſſion, that we ſhall not be diſappointed in the expectations then formed. But, nevertheleſs, as the effect of peace on the amount of duties is not yet fully aſcertained, it is the more neceſſary to practice every uſeful economy, and to incur no expence, which may be avoided without prejudice.

The collection of the internal taxes having been completed in ſome of the ſtates, the officers employed in it are of courſe out of commiſſion. In others they will be ſo ſhortly. But in a few, where the arrangement for the direct tax had been retarded, it will ſtill be ſome time before the ſyſtem is cloſed. It has not yet been thought neceſſary to employ the agent authoriſed by an act of the laſt ſeſſion, for tranſacting buſineſs in Europe relative to debts and loans. Nor have we uſed the power confided by the ſame act, of prolonging the foreign debt by re-loans, and of redeeming inſtead thereof, an equal ſum of the domeſtic debt. Should, however, the difficulties of remitting on ſo large a ſcale render it neceſſary at any time, the power ſhall be executed, and the money thus unemployed abroad ſhall, in conformity with the law, be faithfully employed here in an equivalent extinction of domeſtic debt. When effects ſo ſalutary reſult from the plans you have already ſanctioned, when merely by avoiding falſe objects of expence, we are able, without a direct tax, without internal taxes, and without borrowing, to make large and effectual payments toward the diſcharge of our public debt, and the emancipation of our poſterity from the mortal canker, it is an encouragement, fellow-citizens, of the higheſt order, to proceed as we have begun in ſubſtituting economy for taxation, and in purſuing what is uſeful for a nation,

placed as we are, rather than what is practiſed by others under different circumſtances. And whenſoever we are deſtined to meet events which ſhall call forth all the energies of our countrymen, we have the firmeſt reliance on thoſe energies, and the comfort of leaving for calls like theſe, the extraordinary reſources of loans and internal taxes. In the mean time, by payments of the principal of our debt, we are liberating, annually, portions of the external taxes, and forming from them a growing fund, ſtill further to leſſen the neceſſity of recurring to extraordinary reſources.

The uſual account of receipts and expenditures for the laſt year, with an eſtimate of the expences of the enſuing one, will be laid before you by the ſecretary of the treaſury.

No change being deemed neceſſary in our military eſtabliſhment, an eſtimate of its expences for the enſuing year, on its preſent footing, as alſo of the ſums to be employed in fortifications, and other objects within that department, has been prepared by the ſecretary at war, and will make a part of the general eſtimates which will be preſented to you.

Conſidering that our regular troops are employed for local purpoſes, and that the militia is our general reliance for great and ſudden emergencies, you will doubtleſs think this inſtitution, worthy of a review, and give it thoſe improvements of which you find it ſuſceptible.

Eſtimates for the naval department prepared by the ſecretary of the navy for another year, will in like manner be communicated with the general eſtimates. A ſmall force in the Mediterranean will ſtill be neceſſary to reſtrain the Tripoline cruiſers; and the uncertain tenure of peace with ſome other of the Barbary powers, may eventually require that force to be augmented. The neceſſity of procuring ſome ſmaller veſſels for the ſervice, will raiſe the eſtimate; but the difference in their maintenance will ſoon make it a meaſure of economy.

Preſuming it will be deemed expedient to expend annually a convenient ſum toward providing for the naval defence which our ſituation may require, I cannot but recommend that the firſt appropriations for that purpoſe, may go to the ſaving what we already poſſeſs. No cares, no attentions, can preſerve veſſels from rapid decay, which lie in water, and expoſed to the ſun. Theſe decays require great and conſtant repairs, and will conſume, if continued, a great portion of the monies deſtined to naval purpoſes. To avoid this waſte of our reſources, it is propoſed to add to our navy yard here a dock, within which our preſent veſſels may be laid up dry, and under cover from the ſun. Under theſe circumſtances, experience proves that works of wood will remain ſcarcely at all affected by time. The great abundance of running water which this ſituation poſſeſſes, at heights far above the level of the tide, if employed as is practiſed for lock navigation, furniſhes the means for raiſing and laying up our veſſels, on a dry and ſheltered bed. And ſhould the meaſure be found uſeful here, ſimilar depoſitories for laying up, as well as for building and repairing veſſels, may hereafter be undertaken at other navy yards, offering the ſame means. The plans and eſtimates of the work, prepared by a perſon of ſkill and experience, will be preſented to you without delay; and from theſe it will be ſeen that ſcarcely more than has been the coſt of one veſſel is neceſſary to ſave the whole, and that the annual ſum to be employed toward its completion may be adapted to the views of the legiſlature as to naval expenditure.

To cultivate peace, and maintain commerce and navigation in all their lawful enterprizes; to foſter our fiſheries as nurſeries of navigation, and for the nurture of man, and protect the manufactures adapted to our circumſtances; to preſerve the faith of the nation by an exact diſcharge of its debts and contracts, expend the public money with the ſame care and economy we would practiſe with our own, and impoſe on our citizens no unneceſſary burdens; to keep in all things within the pale of our conſtitutional powers, and cheriſh the federal union, as the only rock of ſafety; theſe, fellow-citizens, are the landmarks by which we are to guide ourſelves in all our proceedings. By continuing to make theſe our rule of action, we ſhall endear to our countrymen the true principles of their conſtitution, and promote an union of ſentiment and of action, equally auſpicious to their happineſs and ſafety. On my part you may count a cordial concurrence in every meaſure for the public good; and on all the information I poſſeſs which may enable you to diſcharge to advantage the high functions with which you are inveſted by you country.

(Signed) THOMAS JEFFERSON.

THE BRITISH MUSE.

IN AMICI NUPTIAS.

QUIS ſonus æthereus, quæ vox jam percutit aures?—
Salve Erato, bene docta Camæna!—
Expectata dies creſcit—Sol clarus ab undis
Exoritur ſine nube malignâ,
Prodigus et radiorum Eois fervere cælis
Incipit, atque invitat amantes.
Turba puellarum, qualis ſtipata decoram eſt
Reginam Carthaginis olim,
Aſſiduis manibus jam tempora caſta Mariæ
Vittâ cingit conjugiali.
Spargitur hic viola, atque hic ſuave rubens hyacinthus,
Thura viam incenduntque Sabæa.
Hic pueri niveâ velati veſte, caniſtra
Geſtant dulcia aromate Cypri.
Adſtat Hymen aræ devinctus tempora ſertis,
Et facilis pia vincula nectit.
Conſcia vix facti, inſolitoque agitata tremore,
Caſta Maria abſcondit amorem
Conjugis in gremio;—verùm optima gaudia ſentit,
Qualia non dederat prior ætas.
Ingenuo, innocuoque genus ſuffuſa rubore,
Virtutem teſtatur honeſtam.
O utinam maneat virtus—thalamumque Mariæ
Aufugiat res litigioſa.
Et proles pulchra (his precibus Deus alme faveto,)
Eximiæ ſiet æmula matris.
Abſit, Amice, dolor, curarumque invida turba,
Et placido ætas defluat amni.
Juſtitiæ Vindex, patriæque impulſor honeſti,
Arripias nomen ſine labe.
Sit tua ſors felix—tua ſint Connubia fauſta—
Et vero Deus adſit amori.
Neve unquam abripiat, quod te tibi reddit amicum
Sæva dies, dum vita ſuperſit.—
Primus amor maneat, donec decurrerit annus
Ad tumulum virtutibus auctus.
Atque duos idem tumulus concludat amantes,
In letho ac vitâ ſociatos.

Rev. R. S——.

To a LADY on her receiving a TITLE.

TITLES may dignity to others give,
But from their aid you cannot that receive:
No new reſpect, that was not always due
To that ſuperior greatneſs found in you.
Noble by nature, and by taſte refin'd,
Thy heart is only equal'd by thy mind.
That modeſt merit, ſhrinking from the gay,
Will now, expanded, to the world diſplay
A bright example, from deception free:
What ev'ry perfect Lady ought to be!

TRUTH.

ODE TO INDEPENDENCE.

HOW ſweet to rove the green-ſward wild,
O'er happy ſpots yet undefil'd,
By lordly tread or pow'r!
How paſſing ſweet to cull with thee,
From Nature's breaſt—induſt'rous bee!
The nectar of each flow'r.

The lucid ſtreams that burſt on high,
From rocks whoſe ſummits ſcale the ſky,
Their cheering draughts afford;
Each ſheaf that waves its golden ears,
A plain but pure repaſt prepares,
Which mocks the tyrant's board.

What tho' no tender victims fall,
To glut with death the flambeau'd hall,
With purple ſplendour bright;
My berries on the wild hills grow,
My hall is heav'ns etherial bow,
My flams—the ſtars of night.

What tho' no ſymphonies of ſound
From martial muſic float around,
I love the wood-lark's ſong;
For me the finch will ſwell its throat,
And Philomel, her peerleſs note,
To pleaſe me will prolong.

O Independence! ever free,
I'll ſcale the breezy height with thee,
Or delve the lowly vale;
With thee I'll tread thoſe groves retir'd,
Where poeſy, all heav'n inſpir'd,
Recites her tender tale.

And there I'll catch the ſyren ſtrain,
Which loves to ſoothe the boſom's pain,
And paint in tints ſo bright
The diſtant ſcenes by hope pourtray'd,
To cheer affliction's dreary ſhade
With renovating light.

I'll watch the morning's early eye,
And to my rural paſtimes fly—
The ſource of peace and health;
I'll fence with hawthorn ſhade around
Some little ſpot of fertile ground:
My all in life—my wealth!

Then, tyrant! boaſt thy ſtately chair;
Thy coſtly robe—thy ſumptuous fare,
Wrung from the ſoul diſtreſt!
Be mine th' ecſtatic bliſs to know
What ſweets from Independence flow,
And, bleſſing—to be bleſt.

EUGENIO.

EPILOGUE TO JOHN BULL:

As SUNG by Mr. JOHNSTONE.

SINCE Epilogue-ſpeaking to me is quite new,
Pray allow me the help of a fiddle or two:
I'm as ſtrange to this job as the man in the moon,
But I think, if I *ſing*, I ſhall *ſpeak to ſome tune*.
Tol de rol, &c.

Now touching this comedy, critics may ſay,
'Tis a trumpery, Bartlemy-fair kind of play:
It ſmells, faith, of Smithfield, we all muſt allow,
For it's all about *Bull*, and the ſcene's the *Red Cow*.

Yet not without moral the author indites,
For he points to the bleſſings of Engliſh-man's rights.
Let a Duke wrong a *Brazier*, the Barriſters all
Know that *braſs* can do wonders in Weſtminſter-hall.

But was ever a tale ſo improbable told,
As *Peregrine* ſwimming with huge lumps of gold?
Should a man who ſinks caſh, with caſh try to ſwim,
For a pound to a ſhilling, his caſh will ſink him.

Let us find ſome excuſe for this ſtrange overſight,
Let's ſuppoſe that his guineas were moſt of 'em light:
Nay, the guineas for grappling the ſhore he might thank—
'Tis amazing of late how they ſtick in the *Bank!*

One circumſtance keeps probability's law,
A beautiful female commits a *faux pas*—
That's nature—but critics, who don't praiſe in haſte,
Will certainly not call the incident chaſte.

Now in art, if not nature, *Tom Shuffleton's* found;
He's one of thoſe puppies who better were drown'd;
Of the worſt Bond-ſtreet litter--ſuch whelps none admire,
Chuck 'em all in the Thames—they wont ſet it on fire.

Now I've touch'd on the principal points of the play,
Shall it run a few nights, or to-night run away?
Your votes, friends and critics, we now reſt upon;
The ayes have it, I think, though it may'nt be *nem. con.*

Oh! *Mr. Dennis Brulgruddery* lives with his dear;
They're in ſtyle, and agree juſt like thunder and beer.
An Iriſhman's blunders are pretty well hackt;
But how charmingly ſure Mr. Johnſtone did act!

Then ſucceſs to John Bull—let this toaſt be his pride,
Bleſs the King of John Bull, and John Bull's Fire-ſide.
At John Bull's Fire-ſide ſhould a foe dare to frown,
May John ne'er want a poker to knock the foe down.

ODE occaſioned by the ATHEISTICAL TENETS publicly avowed in FRANCE.

[From 'Poems,' &c. by the late Rev. Henry Moore, of Liſkeard.]

'IS there a God?' the ſceptic cries,
Profanely daring, and abſurdly wiſe.
Aſk the loud thunder! Aſk the lightning's glare!
When terror riding on his fiery car,
Flaſhing thro' the blue profound,
Shakes the vaulted heav'ns around:
Or aſk the troubled deep,
When o'er the ſurge the dire tornados ſweep,
Bid the vext ſurface into mountains riſe,
And wild confuſion mingles waves and ſkies;
While the poor pilot, pale with dread,
Sees ghaſtly Death hang foaming o'er his head;
Trembling ſhe'll tell, what awful pow'r preſides
To ſink, or ſwell to rage her hoarſe-reſounding tides.
Aſk of the ſkies, who form'd their ſhining frame?
Who rang'd the ſtarry legions in array?
Who thro' the void elanc'd the comet's flame,
And from its golden fountain pour'd the day?

Who bends the concave of the ſev'n-fold bow!
Who gives the riſing morn its roſeat glow;
In tenfold darkneſs now involves the ſphere;
While ſtalk terrific thro' the dreadful night
Rav'ning Death, and pale affright,
And ſhake the ſhiv'ring heart with frantic fear?

Are proofs of pow'r too weak? Behold around
Bounty profuſe, and love, that knows no bound!
For thee, ungrateful man! his fav'rite care,
He ſhed a thouſand charms on Nature's face,
All ſweetly blended—the ſublime, the fair,
Order divine, and ſoul-enchanting grace,
Cloth'd the gay paſtures with emiv'ning green,
Arch'd with embow'ring ſhades the ſylvan ſcene;
Swell'd the high mountain with majeſtic pride,
Slop'd the deep vale, and down its winding ſide
Bid many a freſh rill flow, that murm'ring ſtrays
Moſt muſical in many a waving maze.
For thee his vernal zephyrs play,
And in rich colours blooms the flow'ry May;
For thee his handmaid Nature ſhow'rs around
Her ample ſtores, and loads the gladden'd ground;
For thee his moons their ſilver beams unfold,
And ſuns with regal grandeur blaze in gold.

Yet man, with reaſon blind, perverſe of will,
Caprice his guide, and luſt his law,
Still prone to inderdicted ill,
Nor love can melt, nor pow'r can awe,
Of heav'n's unnumber'd bounties while poſſeſt
The goodneſs he blaſphemes, that makes him bleſt:
Weak reptile! dares with impious pride
Oppoſe th' Omnipotent's command,
Nor ſuffers his uplifted hand
To lay the vengeful bolt aſide.

Inſatiate famine, flame-ey'd war,
Foul diſeaſe's ghaſtly train,
And pining grief, and agonizing pain,
Outrageous frenzy, ſullen-ey'd deſpair,
Whoſe hand determin'd graſps the dart
To drive it to her heart,
Pale-cheek'd anxiety, that know no reſt,
And fell remorſe with ſnaky treſſes crown'd,
With all her thouſand fiends of horror round,
That pierce with guilty pangs the ſecret breaſt,
And that dread voice, that dogs the godleſs crew,
Which ſilent long, at length with awful roll,
Like thunder pealing thro' the ſhudd'ring ſoul,
Compels it to believe, and tremble too,
All at his footſtool wait his dread command:
Grim-viſag'd vengeance heads the griſly band:
Arm'd with her iron rod,
With all the flames and thunders of her God,
Her hoſt of marſhall'd ills ſhe leads below,
And deals around variety of woe.

Hail Greateſt! Wiſeſt! Beſt!
While peal thy thunders, and thy lightnings glow,
Let the bold tremble, and the haughty bow,
And thrilling terrors chill the tyrant's breaſt!
But bleſt the pious, gentle, gen'rous race,
On whom, impreſt in many a lovely line,
The beamings of thy beauty ſhine,
With full reflected grace!
Theirs is heart-cheering hope of eye ſerene,
Mild as ſome ſmiling angel's placid mien;
Theirs is ſtrong-pinion'd faith, that dares the ſky;
Theirs peace etherial, ever calm and even;
Theirs the rapt ſeraph's ſoul-entrancing joy;
Theirs the fair dawnings of the day of heaven.

To them thy flaming bolts no terrors bear,
While in their dread Almighty king they view
The tender father too,
Joy in thy love, and truſt thy faithful care.
Thus ſome bright cherub ſtands before thy ſhrine,
Fearleſs his Maker's awful form ſurveys,
Securely ſees his dreadful glories ſhine,
And in his lightning's living flaſhes plays.

TO MIRA.

SWEET Lady! lay aſide that lyre;
Which thrills the ſoul with warm deſire,
And O! that witching ſmile forbear,
Which guiles the cup of dire deſpair.

For ah! too well thy magic art,
Can charm, inflame, enſlave the heart;
And ah! too well thy ſmile pourtrays,
A ſun-beam on the treach'rous ſeas.

EUGENIO.

THEATRE.

A NEW Comedy, called JOHN BULL; OR, AN ENGLISHMAN'S FIRESIDE, was performed, for the firſt time, at Covent-garden theatre, Saturday, March 5.

DRAMATIS PERSONÆ.

Peregrine, Mr. Cooke; Sir Simon Rochdale, Mr. Blanchard; Frank Rochdale, Mr. H. Johnſton; Lord Fitz Balaam, Mr. Waddy; Hon. Thomas Shuffleton, Mr. Lewis; Job Thornberry, Mr. Fawcett; Dennis Brulgruddery, Mr. J. Johnſtone; Dan, Mr. Emery.—Lady Caroline Braymore, Mrs. Johnſton; Mrs. Brulgruddery, Mrs. Davenport; Mary Thornberry, Mrs. Gibbs.

The ſcene lies in Cornwall, upon the coaſt of which Peregrine, who has been many years abſent from his country, and nearly loſing his life, gains the ſhore by ſwimming from his ſhip, which is in danger of being wrecked. He reaches the Red Cow, a poor inn, upon Muckſluſh-heath, and there learns he is near Penzance, and that his old friend, Job Thornberry, a brazier in that town, is ſtill living. The voice of diſtreſs ſoon aſſails his ear; he ruſhes out, and preſently returns ſupporting Mary, whom he has reſcued from robbers: from her he learns, that ſhe has that morning abandoned her father's houſe, being forſaken by her lover (Francis Rochdale) he being compelled by his father, ſir Simon, to marry lady Caroline Braymore, who, with her father, lord Fitz Balaam, are at the manor houſe to adjuſt matters for that purpoſe; and that ſhe is going to London to ſeek an aſylum.—He prevails on her to wait his return from a ſhort excurſion, ſets out for Penzance, arrives at the houſe of Job Thornberry, at a time when the bailiffs (under a commiſſion of bankruptcy) are in poſſeſſion of his effects, and ſoon makes himſelf known to the brazier, as one who, thirty years before, when a boy, had been relieved by him, and recommended to a captain of a ſhip at Falmouth; and that fortune having favoured him, he had returned home to reward his benefactor, to which intent he produces a ſmall box he had ſwarm aſhore with, which has the name 'Job Thornberry,' written upon it; aſſerting that the contents of it belonged to him, as being the profits gained upon ten pounds, which he had received from Job in his diſtreſs. The brazier declines his offers of aſſiſtance, obſerving, that his daughter Mary, having deſerted him, he has no one left to care for,—It immediately occurs to Peregrine, that ſhe muſt be the girl whom he has juſt reſcued, and promiſes Job, if he will accept his aſſiſtance, and conſider it as a debt, he will bring him to his daughter. This is conſented to, and the brazier's debts, amounting to ſix thouſand pounds, are paid. Peregrine then conducts Job to his daughter, who is ſoon forgiven by her father, and by him accompanied to the houſe of ſir Simon Rochdale. Job here, after having in vain demanded redreſs from ſir Simon for the injury done his daughter, meets with Peregrine, who is come thither to try his influence in behalf of the unhappy family. Lady Caroline Braymore having learnt from Shuffleton that Francis Rochdale is ſecretly attached to another, conſents to that gentleman's addreſſes, and arrives at ſir Simon's at a time when the endeavours of Thornberry and Peregrine have proved fruitleſs, and ſhe acquaints ſir Simon of her marriage with Shuffleton, but the latter ſtill obſtinately refuſes to redreſs the aggrieved brazier, when Peregrine declares himſelf to be, and that he can prove he is, the elder brother to ſir Simon, and heir to the eſtate of which he has ſo long had poſſeſſion. Intelligence alſo at this time arrives, that the ſhip, with Peregrine's whole property on board, is ſafe in port; and ſir Simon at length conſents to the union of the lovers.

This comedy is the production of Mr. Colman's lively muſe. The ſtory is intereſting, and the incidents judiciouſly combined. The whole forms a rich fund of genuine amuſement; nor is the comedy deficient in the pathetic, ariſing from juſt and natural feeling, while it impreſſes on the minds of the audience ſeveral edifying leſſons of morality.

A MONO-DRAME, by Mr. Lewis, was performed at the ſame theatre, Tueſday, March 22. The plot, if ſuch it can be called, is told in a few words. A lady confined in a mad-houſe, under the pretence of inſanity, by a cruel and perfidious huſband, is agonized to ſuch a degree by her ſufferings, and the miſery with which ſhe is ſurrounded, that ſhe actually loſes her reaſon. She is at length recovered by the ſight of an only child, and reſtored to liberty by her father and brothers.

The piece was too horribly affecting to produce approbation. Many ladies were ſo ſhocked as to faint away, and therefore the piece was entirely withdrawn.

IMPERIAL PARLIAMENT.

Continued from Page 149.

HOUSE OF LORDS.

Tuesday, February 22.

THE duke of MONTROSE, pursuant to his notice of yesterday, moved an address of congratulation to his majesty on his recent escape from the machinations of designing traitors, &c. He prefaced it with a neat and appropriate speech, the principal part of which was, that the project was not dictated by personal enmity to our beloved sovereign, but was the result of a design to overthrow the constitution.—His grace concluded with moving the address, which was similar to that presented in the commons, and to which we refer.

Lord CAMDEN seconded the motion. The question was then put, when the address was voted *nem. dis.* and ordered to be presented to his majesty by the whole house.

Friday, February 25.

The order of the day for taking into consideration his majesty's message, relative to the prince of Wales, being read,

Lord PELHAM moved an address to his majesty, thanking him for his gracious communication, and stating their lordship's readiness to concur in any measure calculated to promote the comfort, and support the dignity, of so distinguished a branch of his majesty's family.

The motion was agreed to, and the address accordingly ordered to be presented.

Monday, February 28.

The royal assent was given by commission to the bank restriction bill.

Tuesday, March 8.

Lord HOBART brought down a message from his majesty to the following effect:

'G. R.

'His majesty thinks it necessary to acquaint the house of lords that very considerable military preparations are carrying on in the ports of France and Holland. He therefore judges it proper to take every additional means for maintaining the peace and security of his dominions. Though these preparations are avowedly for colonial purposes, yet, as discussions of great importance are now depending between his majesty and the French government, the result of which must be uncertain, he deems it proper to make this communication to the house of lords, sensible that while they participate in his majesty's earnest and invariable solicitude for the continuance of peace, he may rely with confidence on their concurrence in such measures as shall be calculated to support the honour of his crown, and the essential interests of his people.'

On the motion of lord Hobart, the message was ordered to be taken into consideration to-morrow.

Wednesday, March 9.

The militia training bill, and the Irish revenue officers' disqualification bill, were read a third time, and ordered to the commons.

The order of the day for taking into consideration his majesty's message being then read,

Lord HOBART said, that to the motion which he should have the honour to make upon this occasion, he could not anticipate a dissenting voice. He should, therefore, move, 'That an humble address be presented to his majesty, thanking him for his communication relative to the military preparations now carrying on in the ports of France and Holland, and assuring him, while they partake in his earnest and unwearying solicitude for the continuance of peace, that they concur with him in the expediency of adopting additional measures of precaution for the security of his dominions, and that he may confidently rely on their co-operation in such measures as circumstances may appear to require, for supporting the honour of his majesty's crown, and the essential interests of his people.'

Lord SPENCER said, that, with the sentiments which he had uniformly held, it must be supposed that nothing could be further from his intention than to rise in order to express his dissent from the present motion. He could have wished that the measure had been resorted to at an earlier period.—The system of concession had been too long tried; if it had been sooner departed from he should have augured better for the continuance of peace. Late, however, as this proposal was brought forward, he hailed it as the dawn of a more vigorous line of proceeding on the part of ministers, and as affording us the only chance which remained for us of effecting the salvation of the country. He hoped, therefore, that the spirit which had began to be manifested would

be followed up with equal vigour; and he entertained the firmeſt conviction, that there was not a man in the country but was ready, with the laſt drop of his blood, and the laſt ſhilling of his property, to ſupport his majeſty in the aſſertion of the honour of his crown, and the rights of his people.

Lord GRENVILLE coincided with what had juſt fallen from his noble friend, lord Spencer.

Lord MOIRA entered largely upon the meaſures of vigilance and precaution demanded by the preſent criſis, and concluded with giving his hearty aſſent to the motion.

Lord WESTMORELAND ſupported the addreſs.

Lord AUCKLAND took occaſion to advert to the flouriſhing ſtate of our finances. From the documents which had been laid on the table, in conſequence of a motion lately made by him, it appeared that our revenue exceeded thirty-four millions, being a ſurplus of ſeventeen millions over the intereſt of the national debt, and that great burden was now diminiſhing at the rate of more than 20,000l. a day, the weekly produce of the ſinking fund being about 1,600,000l.

The addreſs was then agreed to *nem. diſſ.* and the lords, with the white ſtaves, ordered to wait on his majeſty, to know when he would be pleaſed to receive it.

Thurſday, March 10.

Lord HOBART brought down a meſſage from his majeſty, communicating to their lordſhips his intention of forthwith increaſing the power veſted in him by ſeveral acts of parliament, of calling out and embodying the militia.

The meſſage being then read by the lord chancellor, lord Hobart moved, that an addreſs of thanks ſhould be preſented to his majeſty, for his gracious communication.

The motion was carried.

Tueſday, March 15.

The houſe went into a committee upon the prince of Wales's annuity bill: when the various clauſes of the bill were gone through.

HOUSE OF COMMONS.

Tueſday, February 22.

Lord EUSTON roſe to move 'That an humble addreſs be preſented to his majeſty, offering the heartfelt congratulations of the houſe, on the detection of the late foul and atrocious conſpiracy, directed againſt his majeſty and government, which was happily fruſtrated by divine Providence, and which diabolical plot afforded a proof of the nature of thoſe deteſtable principles, which were equally repugnant to practical liberty, as they were ſubverſive of the regulated authorities, and deſtructive to all claſſes of ſociety. To aſſure his majeſty that the commons of Great Britain and Ireland were invariably attached to his royal perſon and the conſtitution of the country, and were determined to tranſmit the conſtitution unimpaired to their deſcendants.'

Lord BOYLE roſe to ſecond the addreſs.

The addreſs was then agreed to, and a committee appointed to prepare and bring in the ſame.

The houſe reſolved itſelf into a committee on the mutiny bill.

The SECRETARY at WAR obſerved, that he had given notice, on a former occaſion, that he ſhould move ſome amendments in the committee on the mutiny bill, which he conſidered deſerving the attention of parliament. The firſt amendment was of conſiderable importance, as it was calculated to prevent the criminal practice of deſertion. He ſtated that ſuch had been the exceſs of this crime, that one-fourth of the recruits enliſted, deſerted, which was not only detrimental to the ſervice, but a great expence alſo to the public. He had nothing to offer which was not ſtrictly conſtitutional. The crime was long conſidered one of a moſt heinous nature, and deemed felony, as uniting fraud with perjury. In caſes of deſertion a court martial could adjudge a ſentence of death, but this was ſeldom done, and the culprit ſuffered corporal puniſhment. But this was not ſufficient, for men would again deſert, and again receive bounties as often as they could eſcape detection. His amendment was, therefore, to make deſertion a tranſportable offence. His ſecond amendment was, in caſe a ſoldier was confined for debt, his pay ſhould be ſtopped to diſcharge the ſame, and that the waggons and ſtores, and troops on march, ſhould be exempted from paying toll.

General TARLETON approved of the amendments, which were agreed to, and the bill was ordered to be reported to-morrow.

Wedneſday, February 23.

Mr. WALLACE brought up the addreſs voted yeſterday to his majeſty, on the diſcovery of the late conſpiracy, which was agreed to *nem. con.* and ordered to be preſented by the whole houſe.

Mr. ADDINGTON moved the order of the day for the houſe reſolving itſelf into a committee to conſider his majeſty's moſt gracious meſſage.

The committee was then gone into.

Mr. ADDINGTON roſe to ſubmit a propoſition, which he flattered himſelf would

receive the approbation of the committee. After having made a variety of obſervations on the ſituation of the heir apparent, he concluded by moving a reſolution 'That his majeſty be enabled to grant from the conſolidated fund a yearly ſum, from the 5th of January 1803, to the 5th of July 1806, not exceeding 60,000l. for ſupporting the dignity and ſplendour of his royal highneſs the Prince of Wales, &c.'—Agreed to.

Monday, February 28.

Mr. TYRWHITT (ſolicitor general to the prince of Wales) roſe.—He ſaid that he was authoriſed by his royal highneſs to deliver a meſſage to the houſe, which he begged leave to read:—The meſſage ſtated, that his royal highneſs felt it to be his duty to return his ſincere gratitude to his majeſty for the attention which his majeſty had been graciouſly pleaſed to beſtow upon his ſituation, and upon his majeſty's recommending the ſubject to the conſideration of the houſe. His royal highneſs alſo begged to ſtate his unfeigned acknowledgements for the prompt attention which the meſſage of his majeſty had experienced. His royal highneſs aſſured the houſe, that he was anxious to reſume his ſplendour; but there were ſtill certain debts of honour remaining unpaid, the liquidation of which he ſhould take upon himſelf. For this deſirable purpoſe a conſiderable ſinking fund from his royal highneſs's income would ſtill be requiſite. With regard to the claim of right to the revenues of the duchy of Cornwall, although his royal highneſs was well aſſured of the ſolidity of that claim, yet he had abandoned all further proſecution of the ſame, &c. &c.

On the motion of Mr. Sheridan, the communication of his royal highneſs was ordered to be entered on the journals.

Tueſday, March 1.

The CHANCELLOR of the EXCHEQUER brought up a bill, enabling his majeſty to ſettle a revenue on his royal highneſs the prince of Wales, for the period therein mentioned, and for repealing ſo much of the exiſting act as relates to the appropriation of 13,000l. annually from the revenues of the duchy of Cornwall, toward the liquidation of the debts of his royal highneſs.—Adjourned.

Wedneſday, March 2.

The mutiny bill was read a third time, paſſed, and ordered to the lords.

Monday, March 7.

The prince of Wales's annuity bill was read a third time, paſſed, and ordered to the lords.

Tueſday, March 8.

Mr. ADDINGTON brought down a meſſage from his majeſty, to the ſame effect as that delivered in the houſe of lords. The meſſage having been read by the Speaker, Mr. Addington ſaid, that he ſhould abſtain at preſent from offering any remarks on the meſſage which had juſt been read. He moved that his majeſty's meſſage be taken into conſideration in a committee of the whole houſe tomorrow.—Ordered.

Wedneſday, March 9.

Mr. ADDINGTON moved the order of the day for the houſe taking into conſideration his majeſty's meſſage.

The meſſage being read by the Speaker,

The CHANCELLOR of the EXCHEQUER then roſe and ſpoke in ſubſtance as follows: I riſe, ſir, to propoſe an addreſs to his majeſty on the ſubject of his gracious meſſage, and I feel perfectly convinced that his majeſty's appeal to the wiſdom, to the public ſpirit of this houſe, will not have been made in vain. In the meſſage there are two points to which his majeſty particularly refers: theſe are, the ſtate of the military preparations now going on in the ports of France and Holland, and the important diſcuſſions now depending between the governments of the two countries. Either of theſe points, ſir, would be ſeparately the ground for exerciſing vigilance and circumſpection; conjointly they not only require vigilance and circumſpection, but they further lay the foundation for ſuch preparations as may be ſufficient to meet whatever emergency to which circumſtances may give riſe. His majeſty has ſtated diſtinctly in his meſſage that theſe preparations are for colonial purpoſes. This, ſir, is certainly what is declared to be their diſtinct object, and I hope it will be found that it is their real purpoſe. But when it is recollected what important diſcuſſions are now going forward between the government of this country and the government of France, and what an intimate connexion there may be between the iſſue of theſe diſcuſſions and the preparations to which his majeſty's meſſage alludes, it is impoſſible to determine how far armaments oſtenſibly, and perhaps really, prepared for one object, might not be directed to another. With reſpect to the diſcuſſions referred to in his majeſty's meſſage, it will not, I am ſure, be expected that I ſhould particularly refer to the points which are the ſubjects of diſpute, or ſay any thing of the ſtate to which the diſcuſſions have now arrived. I have, however, great ſatisfaction in ſtating, that there is reaſon to hope that theſe diſputes will be amicably ſettled on

terms conſiſtent with the intereſt and the honour of both countries. But, ſir, if unfortunately theſe expectations ſhall be diſappointed, if the hopes which are entertained of an amicable adjuſtment ſhall prove too ſanguine, and the renewal of hoſtilities ſhall become the only alternative conſiſtent with our independence and our honour, I now beg leave to aſſure the houſe that every communication which can throw light upon the ſubject, every explanation which can place the points in diſpute in that light which will make them level to the judgment of all the members of this houſe, and enable them to form an opinion of the conduct which government has thought proper to purſue from the concluſion of peace up to the preſent moment, will be unreſervedly produced. This aſſurance, I conceive it due to the houſe to give in the moſt explicit terms, and any explanation of a more minute nature will not, I apprehend, be expected in the preſent ſtage of the buſineſs. As to the meaſures which might be adopted in conſequence of the meſſage, this, ſir, is not the time for me to enter into any particular explanation. It will readily occur to every gentleman, that his majeſty, by bringing forward the meſſage, expreſſes his deſire that ſome augmentation ſhould take place in our naval forces. It will at the ſame time be conceived, that it is alſo expedient, that means ſhould be taken to augment our means of internal ſecurity. With reſpect to the latter I may juſt obſerve, that our obvious policy is, to have recourſe to that conſtitutional force which the embodying of the militia would afford. It is with regret that this meaſure muſt be reſorted to, becauſe it is painful to renew thoſe ſacrifices which were made with ſuch cheerfulneſs during the late war. But in the ſituation in which the country is now placed, I am confident that public men will readily make up their minds to the neceſſity of conſiderable privation. I beg, however, ſir, that nothing of what is ſtated in his majeſty's meſſage, or what I have now mentioned, ſhall be conſtrued into an idea that the preparations which circumſtances require have no reference to offenſive operations. I now ſtate diſtinctly, and what I ſay I wiſh to be diſtinctly underſtood, is, that the preparations which are recommended in his majeſty's meſſage ſolely relate to meaſures of defence and means of precaution. On this day I am anxious that unanimity ſhould mark our proceedings. All that I now aſk for is, that the houſe ſhall expreſs their determination to take ſuch ſteps as may enable his majeſty to ſupport the honour of his crown and maintain the intereſts of his people. It is not my wiſh to propoſe any thing by which members might conſider themſelves pledged to any ſpecific meaſures. In the addreſs which I ſhall now have the honour of propoſing, I am anxious to have the concurrence of all gentlemen of all deſcriptions in this houſe. Whatever may be their opinions of men and meaſures, whatever be their ſentiments of the policy of concluding the peace, or of the nature of the terms on which it was concluded; whatever be their ideas of the comparative advantages of continuing the war, I am convinced that the addreſs which I ſhall conclude with moving, is one to which they cannot in reaſon object. I have explained what is its object, and I believe I am not going too far when I indulge a hope that all will concur in an addreſs which merely in anſwer to the meſſage from the throne, aſſures his majeſty, that he may rely on the public ſpirit and liberality of his faithful commons, that they will heartily concur in any meaſure for accompliſhing the important objects recommended in the meſſage.

The honourable gentleman concluded with moving an addreſs, of which the following is a copy.

'That an humble addreſs be preſented to his majeſty, to return his majeſty the thanks of this houſe for his moſt gracious meſſage. To aſſure his majeſty, that his faithful commons are fully ſenſible of the freſh proof which his majeſty has thus afforded of his unceaſing attention to the welfare of his people. That under the circumſtances which his majeſty has been graciouſly pleaſed to communicate, they cannot heſitate to concur with his majeſty in thinking it expedient to adopt additional precautions for the ſecurity of his dominions. That though the preparations, to which his majeſty refers, are avowedly directed to colonial ſervice, yet, as diſcuſſions of great importance appear to be ſubſiſting between his majeſty and the French government, the reſult of which is at preſent uncertain, his majeſty's faithful commons, while they partake of his majeſty's earneſt and unvarying ſolicitude for the continuance of peace, will, with the utmoſt cheerfulneſs, ſupport his majeſty in the adoption of ſuch meaſures as circumſtances may appear to require, for maintaining the honour of his majeſty's crown, and the eſſential intereſts of his people.'

Mr. FOX, in a ſhort ſpeech, expreſſed his alacrity to vote for the addreſs.

Lord HAWKESBURY concurred entirely in the ſentiments and declarations of the chancellor of the exchequer.

Mr. WINDHAM, though he could not

help thinking that in agreeing to the addreſs the houſe were placed in a very awkward ſituation, was unwilling to give a negative to the motion. He ſupported the addreſs only becauſe, as had been agreed by all who had ſpoken on the ſubject, it pledged the houſe to nothing ſpecific.

Mr. SHERIDAN ſaid, he hoped that by moderation and by firmneſs any rupture between the two countries might be avoided. But if by the ambition of France we were compelled to reſort to war as the only means of preſerving our independence and our honour, he truſted that the firſt conſul, as well as the hon. gentleman, would be convinced that this country, even ſingle handed, was not unequal to the great conteſt. He truſted that there was, in the breaſt of every Engliſhman a determination to ſtop at no ſacrifices for the maintenance of our independence, of our honour, and our rights: and he alſo truſted that throughout the country there exiſted but one ſpirit, of meeting whatever difficulties or dangers we might be called upon to encounter with firmneſs, with fortitude, and magnanimity.

The queſtion being called for, was agreed to *nem. con.*

Thurſday, March 10.

Mr. ADDINGTON brought down a meſſage from his majeſty, ſtating, that in conſequence of the preparations making in the ports of France and Holland, his majeſty, in conſequence of the powers veſted in him by an act of the laſt ſeſſion of parliament, had reſolved to call out and embody a certain part of the militia, &c.

The meſſage having been read by the Speaker,

The SECRETARY at WAR moved an addreſs to his majeſty, thanking him for this communication.—He remarked, that it was painful to reflect, that once more the country muſt have recourſe to the ſervices of the militia, who, during the late conteſt, had exhibited ſuch zeal and alacrity in the public cauſe, and in protecting the honour of his majeſty's crown. The motion was put and carried *nem. con.*

Friday, March 11.

The marine mutiny bill, and the Iriſh duty bill, were paſſed and ordered to the lords.

The houſe reſolved itſelf into a committee of ſupply, Mr. Alexander in the chair.

Mr. GARTHSHORE moved, that 10,000 men be employed in the ſea ſervice of Great Britain for ten lunar months, including 2400 marines.

The queſtion was put and agreed to *nem. con.*

Monday, March 14.

The SECRETARY at WAR roſe to move for leave to bring in a bill for conſolidating the proviſions of the different acts, making proviſion for the families of militia-men, drawn and on ſervice. This ſubject was one of much importance, and had met with great conſideration from many gentlemen who had turned their attention to it. The proviſion he intended by this bill would be nearly the ſame with that now exiſting; but there were ſome alterations of a different nature, to which he requeſted particular attention.—The firſt was, that inſtead of throwing the burden upon the pariſh of providing for the family of a ſubſtitute belonging to that pariſh, the burden ſhould be thrown upon the county at large.—2dly, In all caſes where a ſubſtitute, upon being enrolled, ſhall have been guilty of any deception, with reſpect to the number of his family to be taken care of, that the ſubſtitute ſhall take the conſequences; and laſtly, that any ſubſtitute for a pariſh who may have a numerous family, ſhall be diſcharged in order to provide for his family himſelf, the pariſh ſending a man at a leſs expence, to ſerve in his room.—Leave was given.

Tueſday, March 15.

The SECRETARY at WAR moved for leave to bring in a bill for providing for the more ſpeedy eſtabliſhment and filling up vacancies among the officers of the militia. He ſtated the outline of the bill, in the firſt place, to enable field-officers who had ſerved in the militia laſt war, to fill up the vacancies of officers with thoſe recommended by his majeſty.—2dly, That all captains who had ſerved laſt war, although now they may not be qualified, ſhall reſume their reſpective ranks and commands, being previouſly recommended by the king.—3dly, That all captain-lieutenants ſhould have that rank as before, and that in all caſes where any of the privates were employed as artillery men attached to the battalions, they ſhould have an addition to their pay on that account, which formerly they were not entitled to; and laſtly, that when there ſhall be any deficiency of officers, recourſe ſhould be had to the half-pay liſts of the army and marines.

Friday, March 18.

A meſſage from the lords informed the houſe, that their lordſhips had agreed to the prince of Wales's annuity bill, and to the Iriſh revenue bill.

[To be continued.]

HISTORICAL CHRONICLE.

MARCH 3.

YESTERDAY, the right hon. the lord-mayor, aldermen, and common-council, met at Guildhall, and proceeded from thence, accompanied by the ſheriffs, recorder, and city officers, to St. James', to preſent the following addreſs to his majeſty.

To his KING's moſt excellent MAJESTY.

The humble and dutiful Addreſs of the Lord mayor, Aldermen, and Commons of the City of London, in Common-council aſſembled.

Moſt Gracious Sovereign,

We, your majeſty's moſt dutiful and loyal ſubjects, the lord-mayor, aldermen, and commons of the city of London, in common-council aſſembled, approach the throne with the moſt lively and heartfelt congratulations, on the timely diſcovery and defeat of the late traitorous deſigns againſt your royal perſon.

Senſible as we are of the happineſs we enjoy, under your majeſty's mild and paternal government; ruling, as we are perſuaded your majeſty does, not more over the perſons, than in the hearts of a free and grateful people; allied as your auguſt perſon is, to the ſafety of our glorious conſtitution, in church and ſtate; and eſſential as your majeſty's invaluable life is, to the vital intereſts of the empire at large, and of every individual, living under its wiſe, wholeſome, and equal laws.—We are unable, in terms adequate to our feelings, to expreſs our abhorrence at the nefarious and diabolical machinations which were deliberately planned to whelm them all, by one fatal blow, in horror and deſtruction.

Such ſentiments of indignation muſt glow in the hearts of your majeſty's faithful ſubjects throughout the united kingdom; and we entreat your majeſty to believe, that your loyal citizens of London are ſenſibly alive to the mighty miſchief which threatened them, and that their affectionate attachment and ardent zeal will ever, if poſſible, ſtrengthen in proportion to any danger to which your ſacred perſon may be expoſed.

We truſt, however, that the firm and decided execution of the laws, upon the unnatural projectors of ſo foul a deed, will, while it warns the traitor of his puniſhment, convince the loyal of the protection our ſevered conſtitution affords, and effectually ſecure your majeſty, and the united kingdom, over which the goodneſs and mercy of Providence has placed and preſerved you, from any ſuch guilty attempts in future, to diſturb the general tranquillity.

Long may the Almighty guard the throne of theſe realms from the aſſaults of violence, and the inſidious attacks of domeſtic treaſon! and long may your majeſty, in your perſon and family, enjoy that quiet and happineſs in governing, which are ſo intimately interwoven with the deareſt poſſeſſions of the free and happy people who obey!

Signed, by order of court,

HENRY WOODTHORPE.

To which his majeſty was pleaſed to return the following moſt gracious anſwer:

I thank you for this dutiful and loyal addreſs, and accept, with particular ſatisfaction, the affectionate congratulations of my faithful city of London, on the ſignal-protection of divine Providence vouchſafed to me; and upon our common deliverance from a deſperate and wicked attempt to deſtroy our invaluable conſtitution, and therewith the laws, liberties, and happineſs of my people.

MARCH 4.

Yeſterday, about one o'clock, the chamberlain of the city, attended by ſir John Eamer, (late lord-mayor) alderman Le Meſurier, Mr. James Dixon, (as the mover of the vote of thanks, and the preſenter of the ſword) and a number of other gentlemen, friends to ſir James Saumarez, aſſembled in the chamberlain's office, to preſent to admiral ſir James Saumarez, the thanks, and the freedom voted to him by the official repreſentatives of the city of London.

Sir James Saumarez, who was dreſſed in full uniform, took the ſword, and returned a polite and reſpectful anſwer.

MARCH 9.

An unfortunate young female, in conſequence of her mental peace being deſtroyed, and being pregnant, laſt Thurſday plunged into the Thames near Vauxhall. Lifeleſs ſhe was brought to Mr. Kipping's. Perſeverance by Mr. Stuart in the uſual methods, reſtored ſenſibility and animation. Laſt Sunday the Rev. Mr. Battle, at Lambeth church, read the following thankſgiving: 'A young woman, under great trouble of mind, being tempted to commit the unnatural and heinous

ſin of ſuicide, was providentially reſcued from the watery grave, and afterward, by the bleſſing of Almighty God, upon the means directed by the Humane Society, was reſtored to life and to her friends: ſhe, for herſelf, and thoſe alſo who were made the inſtruments of her reſtoration, deſire to return their moſt humble and unfeigned thanks to the merciful ruler of all events for the great bleſſing vouchſafed to her and to them.' Mother and child both ſaved. The treaſurer has paid five guineas to the parties recommended, who have returned thanks for the rewards of the Humane Society.

MARCH 11.

At a general court held on Wedneſday at the Eaſt India houſe on ſpecial affairs. After the uſual forms, and the accounts laid before parliament had been read,

The chairman (Mr. Roberts) ſtated that the object of convening the proprietors was to lay before them a plan approved by his majeſty's miniſters, for the reduction of the Indian debt, by appropriating, for two years, four millions ſterling for the diſcharge of two millions per annum of debt, in India. This was to be effected in the following manner; and for which it would be neceſſary to apply to parliament for their ſanction to the bill, to which the miniſters promiſed their moſt cordial co-operation (here the correſpondence between the court of directors and lord Caſtlereagh was read) viz.

To furniſh an inveſtment in India and China to the extent of four millions in each year, as thus:

Goods and ſtores	£1,800,000
Bullion -	1,000,000
India and China -	1,200,000
	£4,000,000

Two millions of debt to be liquidated after the firſt year, by bills on the court.

Mr. Chapman made a motion to this effect, viz.—'That this court approve the plan, and recommend it to the directors to carry it into immediate effect.'

Which was ſeconded by Mr. Brickwood, and ſupported by the deputy chairman (Mr. Boſanquet) meſſrs. Hudleſtone, Moore, Prinſep, ſir F. Baring, and Mr. Atkins.

Mr. Henchman moved an amendment —'That the court adjourn to the 23d inſtant, and that the papers be printed,' which was ſeconded by Mr. Rook.—The amendment, after receiving powerful ſupport from meſſrs. Johnſtone and Barber, was withdrawn by Mr. Henchman, and the main queſtion was carried by a decided majority, only four hands being held up againſt it.

The following is recommended as a ſimple and eaſy method of obtaining water in almoſt any ſituation:—the ground is perforated by a borer. In the perforation is placed a wooden pipe, which is driven down with a mallet, after which the boring is continued, that the pipe may be driven ſtill further. In proportion as the cavity of the borer becomes loaded, it is drawn up and emptied, and, in time, by the addition of new portions of wooden pipe, the boring is carried to any depth, and water is generally obtained.

The veſtrymen of the pariſh of St. James, Weſtminſter, greatly to their honour, held a meeeing on Monday laſt, for the ſole purpoſe of examining into the conduct of Andrew Pollock, one of the watchmen of that pariſh, toward Dorant Lovell, otherwiſe George Mango, a black man, who was found dead, one morning laſt week, at the corner of Noel-ſtreet, in Wardour-ſtreet, Soho; and it appearing, on ſuch examination, that Pollock had acted with great inhumanity, and in direct contradiction to the ſpecial rules and orders made by the veſtry of the ſaid pariſh, for the regulation of their nightly watch, by permitting the deceaſed to lie in the ſtreet expoſed to the inclemency of the weather, they diſmiſſed him from his employment, and ordered their clerk to inveſtigate the matter further, with a view to proſecuting Pollock and any other perſons concerned in the ſaid inhuman tranſaction.

MARCH 14.

GENERAL ORDERS.

Horſe-guards, March 12. It is the king's pleaſure, that notwithſtanding any leave of abſence granted by his majeſty, or by the commander in chief, all officers belonging to the regiments in Great Britain, or on foreign ſtations, do join their reſpective corps without delay, except ſuch officers as are employed on the recruiting ſervice.—By order of his royal highneſs the commander in chief.

HARRY CALVERT, adjutant-general of the forces.

MARCH 19.

Newcaſtle, March 14. The ſtorm which came on from the weſt, on Friday ſe'nnight, has not perhaps been equalled in point of ſeverity, in this country, for theſe many years. In Alſtonemoor and that neighbourhood, we learn that the oldeſt inhabitant does not recollect any

ſtorm (of wind, rain, or ſnow, combined) which was ever ſo violent, or of ſo long duration. Every little rivulet in that mountainous country reſembled a violent torrent; a thouſand cataracts appeared foaming from the ſides of the hills; the rivers Tyne, Wear, and Eden, were ſwelled beyond their reſpective banks, and ſo rapid were their currents, that they ſwept every thing before them that tended to oppoſe their courſe. So great was the violence of the wind for two ſucceſſive days, that it was impoſſible for a traveller to retain his ſeat on horſeback; and in one inſtance, on the top of Kilhopehead, (a mountain which is next in height to Croſs-fell) a man riding with the wind on his back, was toſſed over the horſe's head. In the neighbourhood of Barnardcaſtle, ſeveral houſes were unroofed, and many trees were pulled up by the roots.

MARCH 21.

Much has already been ſaid of the ſtone, called the Labrador, which has lately made ſo much noiſe. The likeneſs of Louis XVI is ſo ſtriking, and the accompaniments which recal the recollection of the martyrdom of that auguſt victim—of the impiety and revolt of the monſters who lately governed France, are ſo extraordinary, that many perſons will not believe the ſtone to be a natural production. Theſe doubts have determined M. de Rabaſſomme to eſtabliſh, by the beſt judges in this way, that his ſtone could not have been a compoſition.

'We the underſigned, having examined, with the moſt ſcrupulous attention, the ſtone, known under the name of Labrador, bearing the impreſſion of Louis XVI, and which was laid before us by M. the count de Rabaſſomme, certify, that there is not, to our knowledge, any proceſs of art which could imitate that piece, and we are intimately perſuaded, that it is a ſimple production of nature; on the faith of which we have ſigned the preſent declaration.

London, Jan. 25, 1803.

W. HAMILTON, K. B.
L. DUTENS,
I. L. Count BOURNON, Member of the Royal Society.
RUNDELL and BRIDGE.
T. GRAY.'

MARCH 22.

Yeſterday, about eleven o'clock, that piece of artillery taken by general Lawſon, of the royal artillery, from the French at Alexandria, on the 21ſt of March 1801, which lay at Malta for ſome time, and has been ſince brought to Woolwich, was mounted on a new carriage, on the parade in St. James' Park, where the old braſs piece ſtood which had been placed there in the time of Charles II. This wonderful piece, which was, when taken, twenty feet long, has been, from ſome defect in the muzzle, cut down to the length of ſixteen feet, one inch; it is of a fluted make, with raiſed work of hieroglyphics, with two inſcriptions on it not yet decyphered; it is five feet three inches in circumference, ſeven inches and a half in the bore, and ſixteen feet one inch long; its weight is eighty-four hundred, two quarters, and fourteen pounds; its carriage on which it is placed, ſtands five feet high, and is about fourteen feet long, elegantly carved, and executed by Mr. Ponſonby; it is painted ſo well, it is hardly diſtinguiſhable from bronze. The carved work repreſents Britannia ſeated upon a lion, with a complete view of Egypt and its pyramids; a crocodile highly finiſhed; a Turkiſh ſabre; a truncheon; a crown, with G. R. and a ſtar and garter. The breech of a cannon reſts upon an Egyptian idol. It is ſurrounded by a *cheveux de frieze* railing, and was put up under the direction of the gallant officer who had the honour of taking it.

At the late aſſizes at Lincoln, a cauſe was tried before Mr. baron Graham, wherein ſir William Manners, bart. was plaintiff, and Henry Stokes (a ſtaymaker, at Grantham) defendant, which, according to the opening by the plaintiff's counſel, appeared to be for the recovery of 22l 11s 6d advanced by the plaintiff to the defendant ſo long ago as the 17th of October 1796, to help him in his trade. A note of hand was given of that date, payable, with intereſt, on demand; but it was diſcloſed by the plaintiff's own evidence, that the ſame was advanced for the purpoſe of enabling the defendant to purchaſe his freedom in the borough of Grantham, and that more than one hundred freemen of that borough had given bonds or notes to the plaintiff (who has ever ſince the general election of 1796, made pretenſions to the borough) for ſmall loans, and that ſuch as had voted at the laſt general election for the candidate brought forward by the plaintiff, had not been called upon for either principal or intereſt, and that the defendant had voted againſt them. The learned judge, in ſumming up the evidence, ſtated, that the principal queſtion was, whether this is a *bona fide* ſubſiſting ſecurity which ought to be enforced; that is, whether the note was payable at all events, or whether, if the defendant voted

for the intereſt of the plaintiff, it was not to be inſiſted upon, but was ſo to be if he did not vote for him; if the latter, that it ought to be reprobated in a court of juſtice, and is a contract which the law will not enforce, as it deprived electors of the right of exerciſing their franchiſes with that freedom the conſtitution requires.

The jury, after a few minutes conſideration, gave a verdict for the defendant.

The caſe appeared ſo clear from the evidence given on the croſs-examination of the plaintiff's witneſſes, that it was not neceſſary for the defendant's counſel to call a ſingle witneſs.

The verdict will enable more than three hundred perſons to exerciſe their franchiſes according to their own inclinations, thereby reſtoring to them the right of election.

MARCH 23.

Downing-ſtreet, March 22. By diſpatches received this morning from the earl of Elgin, his majeſty's ambaſſador extraordinary at Conſtantinople, dated January 15, 1803, it appears that the differences which had ſubſiſted between the Sublime Porte and the Beys of Egypt, have been ſatisfactorily arranged through the mediation of his majeſty's ambaſſador. —*Lond. Gaz.*

MARCH 24.

The following is the moſt recent detail of the circumſtances relating to the eruption of Mount Etna on the 15th of November laſt. During four hours in the morning, was heard at the foot of the Mount, ſituated to the eaſt, in the city of Catania, an inceſſant and terrific ſound, reſembling thunder. Afterwards, about half the height of the eaſt ſide of the Mount, a new opening made its appearance, from which a ſtream of lava iſſued, and which flowed with rapidity ſeveral Italian miles forward; ſo that the inhabitants of all the neighbouring places fled with precipitation. The ſucceeding day was obſerved, from Catania, an uncommonly large column of fire that iſſued from the uppermoſt crater of the Mount. The clouds of ſmoke darkened the city, and the inhabitants of that city remained in fearful expectation of what was about to happen. The lava flowed ſix days, but more ſlowly toward the end of that period, and occaſioned no other damage than in the territory of Sarco as far as Milo.

MARCH 25.

Yeſterday informations were brought before the lord mayor, againſt fifty reſpectable cheeſemongers in the city, for having expoſed to ſale firkins of butter, from different parts of the country, without the proper marks ordered by the acts of the 33d year of his preſent majeſty, to prevent frauds in the weight of butter ſold by the firkin. The penalty on each firkin by the act is ten ſhillings. Theſe informations were brought by two well-dreſſed men, ſtrangers, who told his lordſhip they had done it by the deſire of a company of cheeſemongers, who wiſhed to have the point ſettled; and as that was the object, they were willing to reduce the informations to whatever number his lordſhip thought proper. In conſequence of this declaration, they were reduced to nearly half the original number, and except one or two, they were commuted. There was no appeal, it being acknowledged the firkins were not marked according to the act. His lordſhip ſaid, it did not appear that any fraud was intended by the gentlemen preſent, but as the act did ſubject the vender of one firkin to the penalty, the ſame as the butter-factor, he was under the neceſſity of inflicting the penalty, and hoped they would not in future receive any butter without the firkin being marked as directed by the act of parliament.

MARCH 26.

At the late Surrey aſſizes, an action was brought by Mr. Runnington, againſt Croſwell, to recover compenſation for the injury the plaintiff had ſuſtained, by the overturning of one of the Brighton ſtage coaches, in conſequence of its being overloaded. It appeared that the coach left Brighton with ſix inſides, and twelve or thirteen outſides. The plaintiff, who was repreſented to be a coal-merchant, was a paſſenger on the box. In addition to this number of paſſengers, they had a great quantity of luggage. Juſt beyond Reigate the coach overturned, and ſeveral of the paſſengers were much hurt. The plaintiff had his face cut dreadfully, ſeveral of his front teeth beat out, and ſeveral contuſions on his head. He was taken up by a poſt chaiſe paſſing by, and conveyed to the cock, at Sutton, where he continued that night; the next day he was viſited by a ſurgeon from town, and by due medical care recovered.—Verdict for plaintiff—Damages 500l.

INFLUENZA.

The following Letter having appeared in the public Prints—we think it will promote the views of the benevolent writer, by inſerting it in our miſcellany.

SIR,

AS the influenza or catarrhal fever is at preſent common in the metropolis (as I learn by the public prints), you will, perhaps,

not object to give the following practical hints a place in your paper.

I very lately publiſhed a tract on conſumption of the lungs, in which a *new* mode of treatment was laid down, as having been found powerfully efficacious in the earlier ſtage of that diſorder; at the ſame time a ſimilar mode of treatment was recommended for its ſalutary effects, in common coughs of the more diſtreſſing kind.

I ſhall not heſitate to borrow an idea from that tract, and ſhall put it into ſuch a form as I have repeatedly found eminently ſerviceable in epidemic coughs, catarrhs, and ſimilar affections.

I will not ſay that the influenza, ſo diſtreſſing and ſo prevalent now in London, is exactly the ſame kind of diſorder as has ſo readily yielded to the medicine I am going to propoſe; from the *common accounts*, however, it appears to be of the ſame nature, and I feel anxious to make public the remedy, from a hope that it will be found uſeful.

In very ſlight caſes, and in infancy, it may be ſufficient to diſſolve ten, fifteen, or twenty grains of mild volatile alkali, or carbonate of ammonia, in half an ounce of water, and one ounce of the ſyrup of white poppies; of this a ten-ſpoonful may be given two or three times a day, or oftener if neceſſary, to children of ſix months old; and two or three tea-ſpoonfuls to thoſe of more advanced ages.

For thoſe who have arrived at maturity, the following may be given.

Diſſolve ſix grains of crude opium, and one drachm of mild volatile alkali, by trituration with one ounce of water, or ſimple peppermint water, and half an ounce of ſyrup of white poppies, or of ſimple ſyrup; to which add two or three drachms of the volatile aromatic ſpirit, or ſpirit of ammoniac; of this mixture about a tea-ſpoonful may be taken in cold water two, three, or four times, in the courſe of the 24 hours. I ſay *about* a tea-ſpoonful, becauſe if there be little cough or pain about the cheſt, &c. a ſmall tea-ſpoonful will be found a ſufficient doſe; but if the cough be troubleſome, it will be occaſionally neceſſary to increaſe the doſe to one and a half or two tea-ſpoonfuls.

If the cough be very diſtreſſing, it may be proper to increaſe the quantity of opium to eight or ten grains in the mixture. The addition of a few drops of oil of anniſeeds will cover the taſte of the alkali, when anniſeeds are not diſagreeable.

If the ſtomach be much loaded, a grain or two of emetic tartar may be given, if thought neceſſary, and the bowels muſt be kept moderately open; for which purpoſe one drachm of the common aloetic pill may be formed into twelve or eighteen pills; and one, two, or three may be taken occaſionally; or, if pills be objected to, rhubarb, or caſtor oil, may be taken for the ſame purpoſe. Acids, fruits, and pickles ſhould be avoided.

This is the mode of treatment, which I have repeatedly found productive of the moſt deſireable effects; and, in hope that, in the preſent inſtance, it may be of equal efficacy, I with it to be made public; particularly as, if it be found not to ſucceed equally to my wiſhes, it ſtill may be tried with ſafety, if the firſt doſe or two be given with caution.

I am, Sir, your's, &c.
E. PEART, M. D.

Butterwick, near Gainſbro',
March 21, 1803.

ALTERATIONS in the Liſt of SHERIFFS.
[See page 155.]

JOHN Johnes, eſq. of Dolecothy, for Carmarthen.

Edward Kendall, eſq. of Beaufort, for Brecon.

BIRTHS.

LADY of the hon. John Bridgman Simpſon, of a ſon.

Lady of colonel Dixon, of Gledhow, of a daughter.

Lady of captain Bourchier, of a ſon.

Lady of colonel White, of a daughter.

Queen of Pruſſia, of a princeſs.

Lady of John Pytches, eſq. M. P. of a daughter.

Lady of captain Young, of a ſon.

Lady of the hon. colonel W. Mordaunt Maitland, of a ſon.

Ducheſs of Mancheſter, of a daughter.

Lady of captain Ogilvy, of a ſon.

Lady of lord St. Aſaph, of a ſon.

Lady of the hon. and rev. Mr. Twiſleton, of a daughter.

Lady of captain Lambert, of a ſon.

Lady of lieutenant-colonel Dyke, of a ſon.

Lady Eliſabeth Loftus, of a ſon.

Lady of John Hayes, bart. of a ſon.

MARRIAGES.

W. MOORE, eſq. of Doctor's Commons, to miſs Price, daughter of the right hon. the lord-mayor.

Charles John Lawſon, eſq. of the Middle Temple, to miſs Lawſon, eldeſt daughter of A. Lawſon, eſq. of Groſvenor-place,

David Tower, eſq. of Cork, to miſs Sophia Chandler, of Mortimer-ſtreet, Cavendiſh-ſquare.

F. B. Hippiſley Coxe, eſq. to miſs Jefferys, only daughter of Thomas Jefferys, eſq. of Glouceſterſhire.

T. Richings, eſq. of Thavies-inn, Holborn, to miſs C. Patterſon, daughter of colonel Patterſon.

William Haſlewood, eſq. of Devonſhire-ſtreet, to miſs Maria Godſal, of Hampſtead.

Thomas Rutſon, eſq. of Hilſingdon, to miſs Iſabella Stable.

Benjamin Walſh, eſq. of Lower Clapton, to miſs Clarke, eldeſt daughter of Iſaac Clarke, eſq. of the ſame place.

Hon. colonel Murray, to miſs Oliphant, of Bechilten.

Mr. Charles A. A. Lloyd, to miſs Yorke, daughter of the hon. C. Yorke.

Edward Butler, eſq. of Tipperary, to miſs Mary Ann Chandler, of Norton-ſtreet, Fitzroy-ſquare.

Charles Weir, eſq. to miſs Helena Price.

Edward Turner, eſq. to miſs D. Tucker, third daughter of the late lieutenant-colonel Tucker.

DEATHS.

PETER Woulfe, eſq. F. R. S. of Barnard's-inn, aged 77.

Lady Clayton, widow of the late ſir Robert Clayton, bart.

Eliſabeth Adam, of Metz, aged 105.

Henry Skeine, eſq. of Walton-on-Thames.

Mrs. Margaret Jackſon, of Old-ſtreet, aged 86.

Major-general D'Oyley.

Hon. Mrs. Bagwell.

Hon. Edward Griffin Kinnard, ſecond ſon of lord Kinnard.

Charles Score Britten, eſq. at Cliſton.

Thomas Locke, eſq. Clarencieux king at arms.

Colonel Carter.

Mademoiſelle Dumeſnil, at Paris, aged 90.

Duke of Bridgewater, aged 76.

Alderman Macaaley, of Coleman-ſtreet-ward.

Vice admiral ſir James Wallis.

H. Fearon, eſq. of the Adelphi.

Mrs. Anna Maria Shipley, relict of Jonathan biſhop of St. Aſaph, aged 86.

Mr Richard Welles, of Sion-ſquare.

Robert Bromley, eſq. Albemarle-ſtreet.

William Patterſon, eſq. of Devonſhire-place.

John Pratt, eſq. of Lower Brook-ſtreet, aged 78.

James Powis, eſq. of St. George's-row, Hyde-park.

Mr. C. Vaux, of Ryegate, aged 82.

Mr. Samuel Bently, of Uttoxeter, aged 81.

William Young, eſq. of Iſlington, and in three days after John Young, eſq. of Clapham, his father.

Dr. George Young, of Hammerſmith, aged 76.

Lady Andover, aged 86.

Mrs. Lowth, relict of the late biſhop of London, aged 73.

James Hoſier, of Camſbarren, near Sterling, aged 104.

Elias Tuckett, eſq. of Tottenham.

G. Walmſley, eſq. late of the firſt, or royal dragoons.

Sir John Scott Hales, bart.

Robert Simmons, eſq. of Charlotte-ſtreet, Bedford-ſquare.

William Boys, eſq. F. A. and L. S. at Sandwich, Kent.

Henry Berkeley Portman, eſq. of Lower Brook-ſtreet.

Hon. T. Walpole, of Chiſwick, aged 76.

Sir James Marriott, aged 72.

John Pardon, eſq. of Blackman-ſtreet, Southwark.

Edward Leeds, eſq. of Charlotte-ſtreet, Bedford-ſquare, aged 75.

PROMOTIONS.

EDMOND Henry viſcount Limerick—to be earl of Limerick.

William Power Keating viſcount Dunlo—to be earl of Clancarty.

Charlotte baroneſs Newcomen, wife of ſir William Gleadowe Newcomen, bart.—to be viſcounteſs Newcomen.

Marquis Donegall—a privy-counſellor.

Richard Welch, eſq.—knight.

James Alexander, eſq.—knight.

William Paxton, eſq.—knight.

William Blizzard, eſq.—knight.

Charles Blicke, eſq.—knight.

BANKRUPTS. From the GAZETTE.

FEBRUARY 26.

J. A. PEACOCK, Broad ſtreet, cheeſemonger.

J. Wingfield the younger, Northallerton, Yorkſhire, mercer.

J. Inglis, Billiter-ſquare, merchant.

T. Stowe, Breadway, Worceſterſhire, butcher.

R. Vickers, Liverpool, merchant.

W. Hitchen, Liverpool, merchant.

T. Harriſon, Biſhop Weremouth, Durham, merchant.
W. Croſsley, Manchester, cotton-manufacturer.
J. Clements, Plymouth-dock, vintner.

MARCH 1.

W. Pardoe, Clement's-lane, ivory-turner.
H. Arkinſtate, and S. George, Burſlem, Staffordſhire, potters.
W. Wood, Charlton-ſtreet, Fitzroy-ſquare, cordwainer.
J. Wright, Lamb-ſtreet, Spitalfields, cheeſemonger.
J. Kilſhaw, Liverpool, merchant.
E. Read, Newcaſtle-upon-Tyne, miller.
R. James, Size-lane, merchant.

MARCH 5.

W. P. Joggett, Bridgewater-ſquare, merchant.
W. Hood, Yorkſhire, merchant.
J. Green, Reading, Berks, mealman.
P. Malone, Manchester, ſhoemaker.
J. Finigan, Peckham-gap, Surry, callico-dyer.
J. Cooper the elder, and J. Cooper the younger, Sevenoaks, Kent, coopers.
A. Leith, Shoe-lane, ſmith.
J. Dow, Buſh-lane, Cannon-ſtreet, merchant.

MARCH 8.

J. Tench the younger, Tokenhouſe-yard, merchant.
R. Clement, New Buckenham, Norfolk, ſhopkeeper.
J. Baylis, Upton-upon-Severn, builder.
R. Whitby, Manchester, cotton-ſpinner.
S. Shallcroſs, and R. Barnes, Manchester, cotton-manufacturers.
J. Drayton, Carſhalton, victualler.

MARCH 12.

J. Richardſon, Pocklington, Yorkſhire, ſheep jobber.
J. Macauley, Liverpool, merchant.
J. Sale, Liverpool, broker.
N. Ayres, Liverpool, earthenwareman.
J. F. Goring, and Eliſabeth Johnſton, St. Mary-axe, merchants.
T. White the younger, Stroud, Kent, coal-merchant.
H. Spalding, Metfield, Suffolk, grocer.
G. Martin, Suffolk-ſtreet, Charing-croſs, watch-maker.
T. Harris, Waltham Holy-croſs, Eſſex, pin-maker.
S. Edwards, Manchester, cotton-ſpinner.

MARCH 15.

D. Harker, Winchcombe, Glouceſterſhire, ſoap-boiler.
W. Morphew, Rotherfield, in Suſſex, dealer in corn.
J. Barker, Field head, Carliſle, woodmonger.
T. Hunt, Leather-lane, Holborn, hardwareman.
W. Simpſon, Clement's-lane, merchant.
J. G. Nicoll, Goldſmith-row, Hackney-road, bricklayer.
T. Ballanger, Tiverton, Devonſhire, innholder.
J. Shepard, Briſtol, hoſier.
H. Bourne, St. James'-ſtreet, Weſtminſter, ſilk-mercer.

MARCH 19.

T. Bevan, Haverfordweſt, ſhopkeeper.
Ann Chriſtopher, Blakedown, Worceſterſhire, iron-mannfacturer.
D. Jones, Havodwryd, Carnarvonſhire, horſe-dealer.
T. Brown the younger, Wigmore-ſtreet, baker.
C. J. A. Witke, Coleman-ſtreet, merchant.
J. Parker, Sodbury, Glouceſterſhire, mercer.
J. Gibbons, and W. Sherwood, Liverpool, merchants.
T. Winter, Brewer-ſtreet, Weſtminſter, optician.
W. Boardman, Liverpool, broker.
S. Ruſſelſheim, Goulſton-ſquare, Whitechapel, merchant.

MARCH 22.

W. Hacker, Canterbury, Kent, builder.
F. Martorelli, Fleet-ſtreet, merchant.

MARCH 26.

W. Hance, Tooley-ſtreet, Southwark, merchant.
W. Stokes, Old Broad-ſtreet, merchant.
G. Sly, Wanſtead, Eſſex, ſtock-broker.
F. George, Panteague, Monmouthſhire, coal-merchant.
T. Hutchon, Coleman-ſtreet, merchant.
R. Rome, Penryn, Cornwall, merchant.
J. Richmond, Skerton, in Lancaſhire, gardener.
B. Acocks, Red Lion-ſtreet, Red Lion-ſquare, coal-merchant.

NEW PUBLICATIONS.

PERCIVAL's Account of the Iſland of Ceylon, 4to, 1l 8s.
Daniel's Rural Sports, vol. 2, 2l 12s 6d.
Bates' Rural Philoſophy, 8vo, 7s.
Corry's Life of William Cooper, eſq. 12mo, 3s.
Rowe's Obſervations on the Rules of Deſcent, 8vo, 3s 6d.
Booker's Caliſta, a Poem, 4to, 2s 6d.

Weſton's Praiſe of Paris, 8vo, 5s 6d.

Fun for every Day, a Collection of Jeſts, 18mo, 3s 6d.

Goldſmith's Geographical Grammar, 12mo, 2s 6d, bound.

Edinburgh Encyclopædia of Wit, 12mo, 3s.

Stockdale's Remonſtrance againſt Inhumanity to Animals, 1s.

Infidel and Chriſtian Philoſophers, a Poem, 1s.

Peers' Minutiæ, vol. 2, 3s.

Trye's Illuſtrations of ſome Injuries to which the Legs are expoſed, 4to, 6s 6d.

Bentley's Divine Logos, 12mo, 3s 6d.

Dickinſon's Antiquities in Nottinghamſhire, 4to, 1l 11s 6d—and fine paper 2l 8s.

Barber's Tour through South Wales and Monmouthſhire, 8vo, 7s—and fine paper with twenty Views, 1l 5s.

Maſon's Life of Richard, Earl Howe, 8vo, 4s.

Kerr's Scottiſh's Poems, Songs, &c. 12mo, 5s.

Lyricks of Horace, in Engliſh Verſe, with the Latin Text, 2 vol. 12mo, 15s.

Ruſſl's Hiſtory of the Orders of Knighthood, 2 vol. 8vo, 18s.

Clarke's Progreſs of Maritime Diſcovery, vol. 1, 4to, 3l 8s.

Badger's (Charlotte) Admonitions to Parents, 8vo, 6s.

Hooper on the Epidemical Diſeaſes now prevailing in London, 1s 6d.

Hatfield's (Miſs) Letters on the Importance of the Female Sex, 12mo, 4s.

Cheyne on the Diſeaſes of Children, Eſſay 2, 12s 6d.

Tayler's Sermons, 8vo, 7s.

King's Letters from France, 1802, 5s.

Aſiatic Annual Regiſter, 1802, 13s.

Repton's Obſervations on Landſcape Gardening, 4to, 5l 5s.

Cumming's Diſſertation on the Influence of Gravitation, 4to, 6s.

Modern Incident in Domeſtic Life, 2 vol. 12mo, 9s.

Amelia Mansfield, 4 vol. 12mo, 14s.

Miranda, or Miſterious Stranger, 2 vol. 12mo, 7s.

Ereſtina, a Tale, 12mo, 2s 6d.

Thaddeus of Warſaw, 4 vol. 12mo, 14s.

Depraved Huſband, and Female Philoſopher, 2 vol. 12mo, 8s.

Hero of the North, a Play, 2s 6d.

Richrand's Phyſiology, 8vo, 8s.

Rees' Obſervations on Diſeaſes of the Uterus, 8vo, 4s 6d.

Troutbeck's Survey of the Scilly Iſlands, 8vo, 4s.

AVERAGE PRICES of CORN,

March 19, 1803.

By the Winchester Quarter of 8 Buſhels.

Inland Counties.

	Wheat.		Rye.		Barley.		Oats.	
	s.	d.	s.	d.	s.	d.	s.	d.
Middleſex	60	5	38	3	25	9	23	6
Surry	61	0	32	0	25	3	21	11
Hertford	54	4	35	6	25	0	20	10
Bedford	52	1	31	7	23	1	19	9
Huntingdon	49	0	——		21	8	16	4
Northampton	52	10	29	0	21	10	17	8
Rutland	54	6	——		22	0	18	0
Leiceſter	55	1	——		22	4	17	6
Nottingham	61	8	35	0	26	4	20	0
Derby	62	5	——		27	4	20	6
Stafford	60	3	——		25	8	20	3
Salop	56	5	38	8	24	6	19	11
Hereford	51	8	32	0	23	7	21	1
Worceſter	53	4	29	0	24	1	23	1
Warwick	58	11	——		24	8	20	2
Wilts	56	6	——		23	0	19	8
Berks	58	7	——		23	3	21	10
Oxford	55	7	——		20	7	19	3
Bucks	53	3	——		22	3	20	6
Brecon	53	10	32	0	25	4	16	0
Montgomery	54	4	——		22	5	16	0
Radnor	51	4	——		23	7	18	10

Maritime Counties.

Eſſex	57	2	33	0	25	3	24	8
Kent	57	10	——		25	6	22	0
Suſſex	52	0	——		25	0	21	4
Suffolk	54	2	——		22	0	19	1
Cambridge	47	10	33	6	20	9	13	11
Norfolk	53	3	37	3	21	2	17	3
Lincoln	53	5	35	6	23	2	15	10
York	54	4	39	4	24	7	16	8
Durham	56	3	30	8	27	4	19	8
Northumberland	51	0	40	0	20	10	17	10
Cumberland	63	4	52	0	28	2	22	1
Weſtmorland	70	1	51	2	29	6	22	9
Lancaſter	63	2	——		26	8	21	11
Cheſter	55	4	——		25	3	18	7
Flint	63	1	——		30	7	16	0
Denbigh	59	5	——		28	5	17	7
Angleſea			——		20	0	14	0
Carnarvon	61	4	42	0	26	0	15	0
Merioneth	65	9	48	0	27	4	19	4
Cardigan	61	2	——		21	1	12	0
Pembroke	48	7	——		22	0	12	8
Carmarthen	55	8	——		21	0	13	6
Glamorgan	55	2	——		21	4	15	10
Gloucester	56	7	——		22	4	18	0
Somerſet	54	6	——		22	9	18	2
Monmouth	56	11	——		23	8	18	8
Devon	59	3	——		21	7	15	11
Cornwall	59	0	——		21	9	16	2
Dorſet	56	7	——		21	8	20	0
Hants	53	11	——		22	2	22	0

Average of England and Wales.

Per Quarter	56	6	36	11	23	10	18	8

March 24—Peck Loaf 3s 0d.

METEOROLOGICAL JOURNAL, February 1803.

[For the Explanation, see Vol. 92, Page 111.]

D.	H.	Baro.	T.out	T.in.	H.	C.	Wind.	Weather, &c. Rain 0,81
1	8	30,43	35	42	59	f	N 1	not cloudy. fine
	2	30,31	39	43	57	3	WNW 1	hazy. little wet at night
2	8	30,12	37	44	60	f	WNW 1	. not cloudy. little wet
	2	29,97	41,5	45	59	4	WNW 1	hazy. little wet. fine eve : little rain and ſnow
3	8	29,62	35	44,5	58	f	NNW 1	. little wet and ſnow at times
	2	29,77	38	44,5	60	5	N 2	little wet. thick upward : clear
4	8	30,24	30	42	53	1	NE 1	. little ſnow but fine
	2	30,32	35	41,5	55	3	NNE 1	hazy. cloudleſs night
5	8	30,17	29,5	41	56	1	SW 1	hazy
	2	30,08	35	41,5	54	3	SSW 2	. thick upward at eve : little ſnow
6	8	29,58	35	40,5	58	h	W 1	little ſnow and rain. fine : cloudy
	2	29,46	39,5	42	55	4	NNW 2	. ſnow at times. cloudleſs night : ſnow
7	8	29,57	31,5	40,5	54	1	N 1	hazy. little ſnow and ſleet at times
	2	29,71	33	41	56	3	N 2	hazy. ſnow at times
8	8	30,02	29	39	58	h	N 1	gentle ſnow : fair
	2	30,13	33	40	56	4	N 1	hazy. thick upward and little ſnow at times
9	8	30,32	30,5	38,5	59	3	N 1	foggy. fine
	2	30,40	34	40,5	57	2	N 1	. foggy night
10	8	30,53	25	39	57	f	N 1	. wind w and fine
	2	30,59	33	39	53	1	SSW 1	hazy
11	8	30,64	22,5	35	54	1	NE 1	foggy. thick upward
	2	30,63	33	38	56	3	ENE 1	little foggy. cloudleſs night
12	8	30,58	23	36	57	f	ENE 1	
	2	30,50	32,5	38	55	h	ESE 1	. drizzly night : fine. little rain
13	8	30,13	37,5	39,5	65	h	S 1	continual rain
	2	29,93	42,5	41	68	h	SSW 1	little rain. fine night
14	8	29,86	34,5	41,5	62	4	W 1	foggy. more foggy
	2	29,83	41	43	62	f	W 1	. fine. thick upward : little rain
15	8	29,58	41	44	63	h	WSW 1	. little rain
	2	29,45	47,5	46,5	63	5	WSW 1	. little rain. fine eve
16	8	29,44	41	46,5	54	2	W 2	
	2	29,57	45	47	53	3	W 3	hazy. cloudy
17	8	29,65	46,5	48	64	h	WSW 3	
	2	29,58	50,5	50	61	5	WSW 3	. more wind and little wet at night : leſs wind
18	8	29,64	43	49	56	h	SW 1	. little rain. fine [and fine
	2	29,71	46,5	50,5	54	1	W 2	
19	8	29,87	37,5	48	62	2	SSW 1	hazy. cloudy : little rain
	2	29,74	48	48	63	5	S 2	. little rain at eve : fine
20	8	29,59	45	48	62	h	S 1	. fine. little cloudy
	2	29,59	49,5	51,5	59	4	S 1	. gentle rain at night
21	8	29,75	43	49	62	h	N 1	
N	2	29,84	44,5	51	65	h	N 1	. drizzly fog. gentle rain
22	8	30,16	38,5	49	61	4	WSW 1	little rain. fine
	2	30,27	44	49	54	2	WSW 1	. clear night
23	8	30,33	37,5	47,5	60	1	S 1	hazy. cloudy. fine
	2	30,30	47	49	56	2	S 1	hazy. thick upward at night : fine
24	8	30,14	43	48	59	2	S 2	: cloudy
	2	30,05	48	50	61	5	S 2	. much gentle rain : clear
25	8	30,15	37	48,5	59	0	NW 1	foggy. fine
	2	30,16	47	50	57	3	W 1	. cloudy. more wind and little rain
26	8	30,18	48	51	62	5	SW 2	
	2	30,13	53	53	60	5	W 3	. drizzly at times in the night
27	8	30,01	51	53	62	5	WSW 4	little rain. fine
	2	30,04	52,5	54	50	2	W 4	. leſs wind at eve. cloudy
28	8	30,38	43	51	56	5	WSW 1	. fine. cloudy and rain at times
	2	30,18	47	54	64	5	SW 2	little wet at times

PRICES of STOCKS, from FEBRUARY 26 to MARCH 29, 1803, both inclusive.

By ANTHONY CLARKE, Stockbroker, No. 29, Princes-Street, Lothbury.

Days	Bank Stock.	3 per C. reduced.	3 per C. consols.	4 per C. Anns.	5 per Ct. 1797	Navy 5 per Ct.	Long Anns.	Short Anns.	India Stock.	Imperial 3 per C.	Imperial Ann.	Exc. Bills 3½d p. day	Exc. Bills 3d per day	English Lot. Tic.
26	190	71 ⅞	71⅛ ⅜	88 ⅜	104 ½	101 ⅜	20 ¾		217	70 ⅛	11 ⅝		2s dis.	
28	189 ½	71 ¾	71 ⅛	88 ⅜	104 ½	101 ⅜	20 ¾		215 ½	70 ¼			2	
1	190	shut.	71½ ⅛	88 ⅜	104 ½	101 ⅜	20 ¾		216	70 ⅛	11 ⅝		2	
2	190		71½ ⅛	88 ⅜	104 ½	101 ⅜	20 ¾		216	70 ⅛	11 ⅝		1	
3	190		71⅝ ⅛	88 ⅜	104 ⅝	101 ¾	shut.	4 ⅝	216 ½	70 ⅛			1	
4	193		71⅝ ⅝	shut.	104 ⅝	102		4 ⅝	222	70 ¼	11 ⅝		1	
5	shut.		71⅝ ½		shut.	102		4 ⅝	222 ½		11 ⅝		2	
7	192 ½		71½ 70⅝			101		4 ½	221 ¼	69 ¾			2	
8	189 ½		70½			100		shut.	219	68 ⅞	11 ⅝		2	
9	182		66 62⅓			97 ½			211	62	11 ⅝		4	
10	182 ½		62½ 64⅞			97 ½			210	63 ⅛	11 ⅞		5	
11	182 ¼		64⅛ 62⅝			97 ½			209	63 ⅛	11		5	
12	180		63½ 62½			96 ½			205	62 ½	11		5	
14			64½ 62½			97			207				5	
15			63¾ 62⅝			97 ⅛			205		11 ¼		6	
16	178 ¼		63 65½			98 ⅛			211	62 ¾	10 ¼		6	
17			65 64¼			99 ¼			211	64	11 ⅛		6	
18			65⅝ 63¼			100			211	63 ⅜	11 ¼		6	
19	181		65½ 64⅜			100			210	64	11		5	
21			64⅛ 65¼			99 ⅜				63 ⅞	11 ⅛		5	
22			64⅛ 65¼			99 ⅜				63 ⅜	11 ⅛		5	
23			64⅝ ¼			99 ⅜				63 ½	11 ⅛		5	
24			64½ ⅞			99 ⅞			209		11		5	
25			64½ 63⅜										5	
26			64¼ 63¼			99 ¼			208 ½		11 ⅛		5	
28			65 65⅜			99 ¼					11 ⅛		5	
29			65⅛ 64½			98 ¾			209		11		6	

☞ In the 3 per Cent. consols. the higheſt and loweſt Price of each Day is given; in every other Article the higheſt Price only, the Long, Short, and Imperial Annuities examed, which are given within a fifteenth of the higheſt Price. In the different Funds that are ſhut, the Prices are given with the Dividend till the Days of Opening.